City of La Salle

La Salle County, Illinois

City Offices – 745 Second Street – La Salle, Illinois 61301-2501

Bus: 815-223-3755 Fax: 815-223-9508 www.lasalle-il.gov

January 27, 2023

Project: Long Term Control Plan – Hegeler Park to Sobieski Detention Sewer Separation – 2023

To All Perspective Bidders:

To develop a plan-holders list and to be able to send out Addenda, if necessary, any perspective bidder **shall** complete the following and email to b.brown@lasalle-il.gov.

Name of Company: _____

Address of Company: _____

Name of Contact: _____

Contact Phone #: _____

Contact email: _____

Please feel free to contact me if you have any questions or comments.

Sincerely,

Brian D. Brown, PE
La Salle City Engineer
745 2nd Street
La Salle, Illinois 61350
815.223.7041

Jeff Grove Mayor 815-223-3755 x5026

Carrie Brown City Clerk 815-223-3755 x5028

John Duncan Finance Director 815-223-3755 x5029

Andy Bacidore Fire Chief Building Inspector 815-228-9218

Leah Inman Economic Development Director 815-488-4442 815-223-3755 x5021

Mike Smudzinski Police Chief 815-223-2131

Brent Bader Community Development and Public Relations Director Deputy City Clerk 815-223-3755 x5028

Virginia Kochanowski City Treasurer 815-224-1191

Brian Brown City Engineer, P.E. 815-223-7041

Lynda Kasik Parks and Recreation Director 815-488-1395

Jeff Bumgarner Supt. of Public Works 815-223-3755 x5022

Jim McPhedran City Attorney Meyers & Flowers 815-223-0230

CITY OF LASALLE

PROPOSAL FOR:

HEGELER PARK TO SOBIESKI STREET DETENTION SEWER SEPARATION

AS PART OF THE LONG TERM CONTROL PLAN

BID DATE: FEBRUARY 16, 2023
BID TIME: 10:00 AM

MAYOR:

JEFF GROVE

ALDERMEN:

BOB THOMPSON
JAMES BACIDORE
JOHN LAVIERI
JORDAN CRANE

JERRY RENOLDS
TOM PTAK
JOSEPH JEPPSON
T. BOO HERNDON

NOTICE TO BIDDERS

1. Notice is hereby given that the City of LaSalle, LaSalle, Illinois acting through the City Engineer, will receive sealed bids at City Hall, 745 Second Street, LaSalle, Illinois until Thursday, February 16, 2023 at 10:00 a.m., local time for the project "City of LaSalle, Hegeler Park to Sobieski Detention Sewer Separation", at which time the bids will be publicly opened and read. Bids will be reviewed and acted upon by the Mayor and City Council at the February 21, 2023 City Council meeting.

2. The proposed work is officially known as "City of LaSalle, Hegeler Park to Sobieski Detention Sewer Separation", and further described as the installation of 734 feet of 24" & 30" Storm Sewer, 4 Storm Manholes, 2 Inlets, 515 sy of Aggregate Surface 6", 70 sy of Pavement Replacement, removal of 3 Structures, removal and replacement 60 feet of curb and gutter, including all other work as further described in the plans and specifications for said work prepared by the City of LaSalle.

3. Plans and specifications are on file at the office of the City Clerk or the City Engineer, 745 Second Street, LaSalle, IL 61301. Prospective bidders and suppliers may download the plans and specifications from the city's website under the Engineering page at http://www.lasalle-il.gov/departments/engineering.

4. All bid proposals must be accompanied by a bid bond, certified check, bank cashier's check or bank draft payable to the City of LaSalle for Five percent (5%) of the amount of the bid as provided in the proposal. No proposals or bids will be considered unless accompanied by such bond, check or draft. Said security shall be maintained until the bid is rejected or accepted or until a performance bond is substituted therefore.

5. Not less than the prevailing rate of wages found by the City of LaSalle or the Department of Labor or determined by a court of review shall be paid to all laborers, workmen, and mechanics performing work under any contract for the proposed construction. If the prevailing wage rates are revised by the Illinois Department of Labor at any time during the term of the contract, the revised prevailing wage rates shall apply to work performed pursuant to the contract, and all contractors and subcontractors shall pay their employees in accordance with the revised prevailing wage rates.

6. The successful bidder for the construction of the improvements will be required to enter into a bond equal to 100% of the amount of the bid with sureties to be approved by the Mayor and City Council, when entering into the contract for construction of the improvements, which shall be conditioned upon the proper and faithful performance by the contractor of the work specified in accordance with the plans and specifications thereof.

7. The City of LaSalle through the City Engineer reserves the right to defer the Award of the Contract for a period not to exceed 60 calendar days after the date bids are to be received, and to accept or reject any or all proposals and to waive technicalities.

City of LaSalle, Illinois

By: *Jeffrey Grove*
Jeffrey Grove, Mayor

PROPOSAL

TO THE OWNER, City of LaSalle

1. Proposal of _____
(Name and Address of Bidder)

_____
for the improvement, designated in Paragraph 2 below, by the City of LaSalle, Hegeler Park to Sobieski Detention Sewer Separation.

2. The plans for the proposed improvement are those prepared by the City of LaSalle, which plans are designated as “City of LaSalle, Hegeler Park to Sobieski Detention Sewer Separation". The specifications herein referred to are the "Standard Specifications for Road and Bridge Construction", Illinois Department of Transportation, adopted January 1, 2022, as amended, “The Standard Specifications for Water and Sewer Construction in Illinois, Current Edition and the enclosed Special Provisions.

3. In submitting this proposal, the undersigned declares that the only persons or parties interested in the proposal as principals are those named herein; and that the proposal is made without collusion with any other person, firm or corporation.

4. The undersigned further declares that he has carefully examined the proposal, plans, specifications, form of contract and contract bond and special provisions, that he has inspected in detail the site of proposed work, that he has familiarized himself with all of the local conditions affecting the contract and the detailed requirements of construction, and understands that in making this proposal he waives all rights to plead any misunderstanding regarding the same.

5. The undersigned further understands and agrees that if this proposal is accepted he is to furnish and provide all necessary machinery, tools, apparatus and other means of construction, and to do all of the work, and to furnish all of the materials specified in the contract, in the manner and at the time therein prescribed, and in accordance with the requirements therein set forth.

6. The undersigned declares that he understands that the quantities mentioned are approximate only and that they are subject to increase or decrease; that he will take in full payment therefore the amount and the summation of the actual quantities, as finally determined multiplied by the unit price shown in the schedule of prices contained herein. The City of LaSalle reserves the right to add or delete work from the contract, not to exceed 25% of the total quantities.

7. The undersigned further agrees that if the Owner decides to alter the improvement by extras or deductions, including the elimination of any one or more items, as provided in the specifications, he will perform the work as altered, increased or decreased at a price to be negotiated between Owner and Contractor as provided in the specifications.

8. The undersigned further agrees that the unit prices submitted herewith are for the purpose of obtaining a gross sum, and for use in computing the value of extras and deductions; that if there is a discrepancy between the gross sum bid and that bid resulting from the summation of quantities multiplied by their respective unit prices, the latter shall apply.

9. The undersigned further agrees that if the Owner decides to extend or shorten the improvement, or otherwise alter it by extras or deductions, including the elimination of any one or more items, as provided in the specifications, he will perform the work as altered, increased or decreased at the contract unit prices.

10. The undersigned further agrees that the Engineer may at any time during the progress of the work covered by this contract order other work and materials incidental thereto and that all such work and materials as do not appear in the proposal or contract as a specified item accompanied by a unit price, and which are not included under the bid price for other items of this contract, shall be performed as extra work, and that he will accept as full compensation therefore the actual cost plus fifteen percent (15%), the actual cost to be determined as provided in the specifications.

11. The undersigned further agrees to execute a contract for this work and present the same to the Owner within fifteen (15) days after the notice of the award of the contract to him.

12. The undersigned further agrees that he and his surety will execute and present to the Owner within fifteen (15) days after the date of notice of the award of the contract, a contract bond satisfactory to and in the form prescribed by the Owner, in the penal sum of one hundred (100%) percent of the full amount of the contract, guaranteeing the faithful performance of the work in accordance with the terms of the contract, and for the payment of all persons performing labor and furnishing material in connection with this contract.

13. The undersigned further agrees to begin work not later than five (5) days after the execution and approval of the contract and contract bond, unless otherwise provided, and to prosecute the work in such manner and with sufficient materials, equipment, and labor as will insure it's completion within the time limit specified herein, it being understood and agreed that completion within the time limit is an essential part of the contract. In case of failure to complete the work within the time named herein or within such extra time as may have been allowed by extensions, the undersigned agrees that the Owner shall withhold from such sums as may be due him under the terms of the contract, the costs set forth in the specifications, which costs shall be considered and treated not as a penalty but as damages due the Owner from the undersigned by reason of and other items which have caused an expenditure of public funds resulting from the failure of the undersigned to complete the work within the time specified in the contract.

14. In consideration of the mutual covenants and agreements herein contained, and other good and valuable consideration received and to be received, the Contractor hereby agrees as follows:

A. To comply with all applicable laws, regulations and rules promulgated by any Federal, State, County, Municipal and/or other governmental unit or regulatory body now in effect or which may be in effect during the performance of the work. Included within the scope of the laws, regulations and rules referred to in this paragraph but in no way to operate as a limitation, are all forms of traffic regulations, public utility and Intrastate and Interstate Commerce Commission regulations, Workmen's Compensation laws, Prevailing Wage laws, the Social Security Act of the Federal Government and any of its titles, FEPC or FEOC statutory provisions and rules and regulations.

B. To protect, indemnify, hold and save harmless and defend the City against any and all claims, costs, causes, actions, and expenses, including but not limited to attorney's fees incurred by reason of a lawsuit or claim for damages or compensation arising in favor of any person, corporation or other entity, including the employees or officers or independent contractors or subcontractors of the contractor or City, on account of personal injuries or death, or damages to property occurring, growing out of, incident to, or resulting directly or indirectly from the performance by the Contractor or subcontractor of their officers, agents or employees hereunder, whether such loss, damage injury or liability is contributed to be the negligence of the City, its officers, agents, employees, independent contractors, or by premises themselves or any equipment thereon whether latent or patent, or from other causes whatsoever, except that the contractor shall have no liability or damages or the costs incident thereto caused by the sole negligence of the City.

C. To keep in force, to the satisfaction of the City, at all times during the performance of the work referred to above, Broad Form, Public Liability Insurance including contractual liability and Automobile Liability Insurance with Bodily Injury each with limits of not less than $1,000,000

Broad Form Property Damage Insurance with limits of not less than $500,000 and workers compensation and related insurance coverage at amount required by statute. The Contractor agrees that at any time upon the demand of the City, proof of such insurance coverage will be submitted to the City. There shall be no additional charge for said insurance to the City. At the request of the City the Contractor will furnish certificates of insurance for the insurance coverage required herein, naming the City as an additional insured and providing that such policies may not be canceled or amended without ten days' prior written notice having been given to the City.

D. To furnish any affidavit or certificate, in connection with the work covered by this agreement as provided by law.

E. To indemnify the City for any loss it may sustain by theft or other cause from the acts or negligence of the employees of the Contractor or of the subcontractors.

F. Whenever in this Agreement the term City is used with regard to the obligation of the Contractor to indemnify, hold harmless or defend, the word City shall include the officers, employees and independent contractors of the City. It is mutually understood and agreed that the Contractor shall have full control of the ways and means of performing the work referred to above and that the Contractor or his/its employees, representatives or subcontractors are in no sense employees of the City, it being specifically agreed that in respect to the City, the Contractor and any party employed by the Contractor bears the relationship of an independent contractor.

15. Accompanying this proposal is a bid bond, bank draft, bank cashier's check, or certified check complying with the requirements of the specifications, made payable to the City of LaSalle. The amount of the bond, draft, or check is $_____.

If this proposal is accepted and the undersigned shall fail to execute a contract and contract bond as required herein, it is hereby agreed that the amount of the bond, draft, or check shall become the property of the Owner, and shall be considered as payment of damages due to delay and other causes suffered by the Owner because of the failure to execute said contract and contract bond; otherwise said bond, draft or check shall be returned to the undersigned.

ATTACH BID BOND, BANK DRAFT, BANK CASHIER'S CHECK
OR CERTIFIED CHECK HERE.

BID PROPOSAL

The undersigned submits herewith his summary schedule and individual schedule of prices covering the work to be performed under this contract for each division; he understands that he must show in the individual division schedules the unit prices for which he proposes to perform each item of work, that the extensions must be made by him, and that if not so done his proposal may be rejected as irregular.

February 16, 2023

CITY OF LASALLE, HEGELER PARK TO SOBIESKI DETENTION SEWER SEPARATION

SUMMARY SCHEDULE

	ITEM	QUANTITY	UNIT	UNIT COST	TOTAL COST
1	RELOCATE TREE, 4"	1	EACH		
2	TRENCH BACKFILL	101	CU YD		
3	REMOVE, STOCKPILE AND PLACE TOPSOIL	175	CU YD		
4	TOPSOIL FURNISH AND PLACE, 4"	1638	SQ YD		
5	SEEDING, CLASS 1 (SPECIAL)	2538	SQ YD		
6	PERIMETER EROSION BARRIER	800	FOOT		
7	INLET FILTERS	2	EACH		
8	AGGREGATE SURFACE, 6"	515	SQ YD		
9	HOT-MIX ASPHALT SURFACE COURSE, MIX "C", N50	8	TON		
10	HOT-MIX ASPHALT SURFACE REMOVAL, 2"	70	SQ YD		
11	PAVEMENT REPLACEMENT, 3"	18	SQ YD		
12	COMBINATION CONCRETE CURB AND GUTTER, REMOVE AND REPLACE (SPECIAL)	60	FOOT		
13	24-INCH STORM SEWER, PVC, WATER QUALITY (PS-115)	29	FOOT		
14	STORM SEWERS, HIGH DENSITY POLYETHYLENE, 24 INCH	267	FOOT		
15	STORM SEWERS, HIGH DENSITY POLYETHYLENE, 30 INCH	438	FOOT		
16	CONNECT PROPOSED 24" PIPE TO EXISTING STRUCTURE	1	EACH		
17	CONNECT PROPOSED 30" PIPE TO EXISTING STRUCTURE	1	EACH		
18	INLET SPECIAL NO. 4	2	EACH		
19	MANHOLES, TYPE A, 4'-DIAMETER, TYPE 1 FRAME, OPEN LID	1	EACH		
20	MANHOLES, TYPE A, 5'-DIAMETER, TYPE 1 FRAME, OPEN LID	3	EACH		
21	REMOVE STRUCTURE	3	EACH		
22	REMOVE FLARED END SECTION	2	EACH		
23	REMOVE EXISTING STORM SEWER	47	FOOT		
24	PLUG, 12"	4	EACH		
25	PLUG, 18"	2	EACH		
26	PLUG, 21"	1	EACH		

Job Total: **$** _____

Corporate Seal

or

Notary Public Required

Company Name: _____

Company Officer: _____

Title: _____

INDEX
FOR
SUPPLEMENTAL SPECIFICATIONS
AND RECURRING SPECIAL PROVISIONS

Adopted January 1, 2023

This index contains a listing of SUPPLEMENTAL SPECIFICATIONS, frequently used RECURRING SPECIAL PROVISIONS, and LOCAL ROADS AND STREETS RECURRING SPECIAL PROVISIONS.

ERRATA Standard Specifications for Road and Bridge Construction
(Adopted 1-1-22) (Revised 1-1-23)

SUPPLEMENTAL SPECIFICATIONS

Std. Spec. Sec.		Page No.
202	Earth and Rock Excavation	1
204	Borrow and Furnished Excavation	2
207	Porous Granular Embankment	3
211	Topsoil and Compost	4
407	Hot-Mix Asphalt Pavement (Full-Depth)	5
420	Portland Cement Concrete Pavement	6
502	Excavation for Structures	7
509	Metal Railings	8
540	Box Culverts	9
542	Pipe Culverts	29
586	Granular Backfill for Structures	34
644	High Tension Cable Median Barrier	35
782	Reflectors	36
801	Electrical Requirements	38
821	Roadway Luminaires	40
1003	Fine Aggregates	41
1004	Coarse Aggregates	42
1020	Portland Cement Concrete	43
1030	Hot-Mix Asphalt	44
1067	Luminaire	45
1097	Reflectors	52

Illinois Department of Transportation

Check Sheet for Recurring Special Provisions

Local Public Agency	County	Section Number
City of La Salle	LaSalle	

☐ **Check this box for lettings prior to 01/01/2023.**

The Following Recurring Special Provisions Indicated By An "X" Are Applicable To This Contract And Are Included By Reference:

Recurring Special Provisions

Check Sheet #			Page No.
1	☐	Additional State Requirements for Federal-Aid Construction Contracts	53
2	☐	Subletting of Contracts (Federal-Aid Contracts)	56
3	☐	EEO	57
4	☐	Specific EEO Responsibilities Non Federal-Aid Contracts	67
5	☐	Required Provisions - State Contracts	72
6	☐	Asbestos Bearing Pad Removal	78
7	☐	Asbestos Waterproofing Membrane and Asbestos HMA Surface Removal	79
8	☐	Temporary Stream Crossings and In-Stream Work Pads	80
9	☐	Construction Layout Stakes	81
10	☐	Use of Geotextile Fabric for Railroad Crossing	84
11	☐	Subsealing of Concrete Pavements	86
12	☐	Hot-Mix Asphalt Surface Correction	90
13	☐	Pavement and Shoulder Resurfacing	92
14	☐	Patching with Hot-Mix Asphalt Overlay Removal	93
15	☐	Polymer Concrete	95
16	☐	Reserved	97
17	☐	Bicycle Racks	98
18	☐	Temporary Portable Bridge Traffic Signals	100
19	☐	Nighttime Inspection of Roadway Lighting	102
20	☐	English Substitution of Metric Bolts	103
21	☐	Calcium Chloride Accelerator for Portland Cement Concrete	104
22	☐	Quality Control of Concrete Mixtures at the Plant	105
23	☐	Quality Control/Quality Assurance of Concrete Mixtures	113
24	☐	Reserved	129
25	☐	Reserved	130
26	☐	Temporary Raised Pavement Markers	131
27	☐	Restoring Bridge Approach Pavements Using High-Density Foam	132
28	☐	Portland Cement Concrete Inlay or Overlay	135
29	☐	Portland Cement Concrete Partial Depth Hot-Mix Asphalt Patching	139
30	☐	Longitudinal Joint and Crack Patching	142
31	☐	Concrete Mix Design - Department Provided	144
32	☐	Station Numbers in Pavements or Overlays	145

Local Public Agency	County	Section Number
City of La Salle	LaSalle	

The Following Local Roads And Streets Recurring Special Provisions Indicated By An "X" Are Applicable To This Contract And Are Included By Reference:

Local Roads And Streets Recurring Special Provisions

Check Sheet #			Page No.
LRS 1		**Reserved**	147
LRS 2	☐	Furnished Excavation	148
LRS 3	☒	Work Zone Traffic Control Surveillance	149
LRS 4	☐	Flaggers in Work Zones	150
LRS 5	☒	Contract Claims	151
LRS 6	☒	Bidding Requirements and Conditions for Contract Proposals	152
LRS 7	☐	Bidding Requirements and Conditions for Material Proposals	158
LRS 8		**Reserved**	164
LRS 9	☐	Bituminous Surface Treatments	165
LRS 10		**Reserved**	169
LRS 11	☒	Employment Practices	170
LRS 12	☒	Wages of Employees on Public Works	172
LRS 13	☒	Selection of Labor	174
LRS 14	☐	Paving Brick and Concrete Paver Pavements and Sidewalks	175
LRS 15	☒	Partial Payments	178
LRS 16	☒	Protests on Local Lettings	179
LRS 17	☒	Substance Abuse Prevention Program	180
LRS 18	☐	Multigrade Cold Mix Asphalt	181
LRS 19	☐	Reflective Crack Control Treatment	182

State of Illinois
Department of Transportation
Bureau of Local Roads and Streets

SPECIAL PROVISION
FOR
INSURANCE

Effective: February 1, 2007
Revised: August 1, 2007

All references to Sections or Articles in this specification shall be construed to mean specific Section or Article of the Standard Specifications for Road and Bridge Construction, adopted by the Department of Transportation.

The Contractor shall name the following entities as additional insured under the Contractor's general liability insurance policy in accordance with Article 107.27:

City of and employees of LaSalle

The entities listed above and their officers, employees, and agents shall be indemnified and held harmless in accordance with Article 107.26.

LaSalle County Prevailing Wage Rates posted on 1/18/2023

						Overtime								
Trade Title	**Rg**	**Type**	**C**	**Base**	**Foreman**	**M-F**	**Sa**	**Su**	**Hol**	**H/W**	**Pension**	**Vac**	**Trng**	**Other Ins**
ASBESTOS ABT-GEN	All	ALL		36.11	38.11	1.5	1.5	2.0	2.0	9.35	19.87	0.00	0.80	
ASBESTOS ABT-MEC	All	BLD		39.60	42.77	1.5	1.5	2.0	2.0	14.77	13.59	0.00	0.86	
BOILERMAKER	All	BLD		42.13	45.13	1.5	1.5	2.0	2.0	7.07	24.01	0.00	2.07	
BRICK MASON	All	BLD		41.63	42.63	1.5	1.5	2.0	2.0	11.65	15.00	0.00	0.95	
CARPENTER	All	BLD		35.75	39.33	1.5	1.5	2.0	2.0	11.01	22.36	0.00	0.86	
CARPENTER	All	HWY		38.00	39.75	1.5	1.5	2.0	2.0	11.18	22.74	0.00	0.80	
CEMENT MASON	All	ALL		39.92	41.02	1.5	1.5	2.0	2.0	12.10	18.63	0.00	0.55	
CERAMIC TILE FINISHER	All	BLD		37.77		1.5	1.5	2.0	2.0	11.60	10.79	0.00	0.87	
COMMUNICATION TECHNICIAN	All	BLD		40.50	44.55	1.5	1.5	2.0	2.0	16.49	15.43	0.00	0.75	2.21
ELECTRIC PWR EQMT OP	All	ALL		50.97	60.48	1.5	1.5	2.0	2.0	8.53	14.27	0.00	0.76	
ELECTRIC PWR GRNDMAN	All	ALL		34.63	60.48	1.5	1.5	2.0	2.0	8.04	9.70	0.00	0.52	
ELECTRIC PWR LINEMAN	All	ALL		56.74	60.48	1.5	1.5	2.0	2.0	8.70	15.88	0.00	0.85	
ELECTRIC PWR TRK DRV	All	ALL		36.35	60.48	1.5	1.5	2.0	2.0	8.09	10.18	0.00	0.54	
ELECTRICIAN	N	BLD		49.60	54.06	1.5	1.5	2.0	2.0	16.94	21.04	0.00	1.23	4.47
ELECTRICIAN	S	BLD		45.12	49.63	1.5	1.5	2.0	2.0	7.35	11.43	0.00	0.68	
ELEVATOR CONSTRUCTOR	All	BLD		53.26	59.92	2.0	2.0	2.0	2.0	16.07	20.56	4.26	0.70	
GLAZIER	All	BLD		37.53	39.53	1.5	1.5	1.5	2.0	16.83	7.71	0.00	1.25	
HEAT/FROST INSULATOR	All	BLD		52.80	55.97	1.5	1.5	2.0	2.0	14.77	16.76	0.00	0.86	
IRON WORKER	All	ALL		45.50	50.05	2.0	2.0	2.0	2.0	13.11	24.79	0.00	1.00	
LABORER	All	ALL		34.11	36.11	1.5	1.5	2.0	2.0	9.35	19.87	0.00	0.80	
LABORER, SKILLED	All	ALL		34.51	36.51	1.5	1.5	2.0	2.0	9.35	19.87	0.00	0.80	
LATHER	All	BLD		35.75	39.33	1.5	1.5	2.0	2.0	11.01	22.36	0.00	0.86	
MACHINIST	All	BLD		53.18	57.18	1.5	1.5	2.0	2.0	9.93	8.95	1.85	1.47	
MARBLE FINISHER	All	BLD		37.77		1.5	1.5	2.0	2.0	11.60	10.79	0.00	0.87	
MARBLE MASON	All	BLD		40.59	41.59	1.5	1.5	2.0	2.0	11.65	12.95	0.00	0.92	
MILLWRIGHT	All	BLD		44.93	49.42	1.5	1.5	2.0	2.0	11.71	18.00	0.00	0.85	
MILLWRIGHT	All	HWY		44.93	49.42	1.5	1.5	2.0	2.0	11.71	18.00	0.00	0.85	
OPERATING ENGINEER	All	BLD	1	53.30	57.30	2.0	2.0	2.0	2.0	22.15	19.30	2.00	2.55	
OPERATING ENGINEER	All	BLD	2	52.00	57.30	2.0	2.0	2.0	2.0	22.15	19.30	2.00	2.55	
OPERATING ENGINEER	All	BLD	3	49.45	57.30	2.0	2.0	2.0	2.0	22.15	19.30	2.00	2.55	
OPERATING ENGINEER	All	BLD	4	47.70	57.30	2.0	2.0	2.0	2.0	22.15	19.30	2.00	2.55	

OPERATING ENGINEER	All	BLD	5	55.30	57.30	2.0	2.0	2.0	2.0	22.15	19.30	2.00	2.55	
OPERATING ENGINEER	All	BLD	6	56.30	57.30	2.0	2.0	2.0	2.0	22.15	19.30	2.00	2.55	
OPERATING ENGINEER	All	BLD	7	54.30	57.30	2.0	2.0	2.0	2.0	22.15	19.30	2.00	2.55	
OPERATING ENGINEER	All	HWY	1	53.30	57.30	1.5	1.5	2.0	2.0	22.15	19.30	2.00	2.55	
OPERATING ENGINEER	All	HWY	2	52.75	57.30	1.5	1.5	2.0	2.0	22.15	19.30	2.00	2.55	
OPERATING ENGINEER	All	HWY	3	50.70	57.30	1.5	1.5	2.0	2.0	22.15	19.30	2.00	2.55	
OPERATING ENGINEER	All	HWY	4	49.30	57.30	1.5	1.5	2.0	2.0	22.15	19.30	2.00	2.55	
OPERATING ENGINEER	All	HWY	5	48.10	57.30	1.5	1.5	2.0	2.0	22.15	19.30	2.00	2.55	
OPERATING ENGINEER	All	HWY	6	56.30	57.30	1.5	1.5	2.0	2.0	22.15	19.30	2.00	2.55	
OPERATING ENGINEER	All	HWY	7	54.30	57.30	1.5	1.5	2.0	2.0	22.15	19.30	2.00	2.55	
PAINTER	All	ALL		38.94	40.94	1.5	1.5	1.5	2.0	16.99	7.72	0.00	1.35	
PAINTER - SIGNS	All	BLD		41.55	46.67	1.5	1.5	2.0	2.0	3.04	3.90	0.00	0.00	
PILEDRIVER	All	BLD		36.00	39.60	1.5	1.5	2.0	2.0	11.01	22.36	0.00	0.86	
PILEDRIVER	All	HWY		39.00	40.75	1.5	1.5	2.0	2.0	11.18	22.74	0.00	0.80	
PIPEFITTER	All	BLD		53.00	56.00	1.5	1.5	2.0	2.0	11.85	22.85	0.00	2.92	
PLASTERER	All	BLD		39.92	41.02	1.5	1.5	2.0	2.0	12.10	18.63	0.00	0.55	
PLUMBER	All	BLD		54.80	58.10	1.5	1.5	2.0	2.0	16.70	17.04	0.00	1.58	
ROOFER	All	BLD		37.30	39.30	1.5	1.5	2.0	2.0	11.83	13.01	0.00	0.64	
SHEETMETAL WORKER	All	BLD		43.74	45.93	1.5	1.5	2.0	2.0	10.62	21.91	0.00	1.25	
SPRINKLER FITTER	All	BLD		44.98	47.98	1.5	1.5	2.0	2.0	11.45	14.92	0.00	0.52	
STONE MASON	All	BLD		41.63	42.63	1.5	1.5	2.0	2.0	11.65	15.00	0.00	0.95	
TERRAZZO FINISHER	All	BLD		37.77		1.5	1.5	2.0	2.0	11.60	10.79	0.00	0.87	
TILE LAYER	All	BLD		35.75	39.33	1.5	1.5	2.0	2.0	11.01	22.36	0.00	0.86	
TILE MASON	All	BLD		40.59	41.59	1.5	1.5	2.0	2.0	11.60	12.95	0.00	0.92	
TRUCK DRIVER	All	ALL	1	40.91	45.27	1.5	1.5	2.0	2.0	14.69	7.16	0.00	0.25	
TRUCK DRIVER	All	ALL	2	41.50	45.27	1.5	1.5	2.0	2.0	14.69	7.16	0.00	0.25	
TRUCK DRIVER	All	ALL	3	41.77	45.27	1.5	1.5	2.0	2.0	14.69	7.16	0.00	0.25	
TRUCK DRIVER	All	ALL	4	42.16	45.27	1.5	1.5	2.0	2.0	14.69	7.16	0.00	0.25	
TRUCK DRIVER	All	ALL	5	43.26	45.27	1.5	1.5	2.0	2.0	14.69	7.16	0.00	0.25	
TRUCK DRIVER	All	O&C	1	32.73	36.22	1.5	1.5	2.0	2.0	14.69	7.16	0.00	0.25	
TRUCK DRIVER	All	O&C	2	33.20	36.22	1.5	1.5	2.0	2.0	14.69	7.16	0.00	0.25	
TRUCK DRIVER	All	O&C	3	33.42	36.22	1.5	1.5	2.0	2.0	14.69	7.16	0.00	0.25	
TRUCK DRIVER	All	O&C	4	33.73	36.22	1.5	1.5	2.0	2.0	14.69	7.16	0.00	0.25	
TRUCK DRIVER	All	O&C	5	34.61	36.22	1.5	1.5	2.0	2.0	14.69	7.16	0.00	0.25	
TUCKPOINTER	All	BLD		41.63	42.63	1.5	1.5	2.0	2.0	11.65	15.00	0.00	0.95	

Legend
Rg Region
Type Trade Type - All,Highway,Building,Floating,Oil & Chip,Rivers
C Class
Base Base Wage Rate
OT M-F Unless otherwise noted, OT pay is required for any hour greater than 8 worked each day, Mon through Fri. The number listed is the multiple of the base wage.
OT Sa Overtime pay required for every hour worked on Saturdays
OT Su Overtime pay required for every hour worked on Sundays
OT Hol Overtime pay required for every hour worked on Holidays
H/W Health/Welfare benefit
Vac Vacation
Trng Training
Other Ins Employer hourly cost for any other type(s) of insurance provided for benefit of worker.

Explanations LASALLE COUNTY

ELECTRICIANS (NORTH) - Townships of Mendota, Meriden, Earl, Adams, Troy Grove, Ophir, Northville, Freedom, Serena, Mission, Dimmick, Waltham, Wallace, Dayton, Rutland, Miller, Manlius, Peru, LaSalle, Utica, Ottawa, South Ottawa, Eden, Vermilion, Deer Park, Farm Ridge.

MILLWRIGHTS (EAST) - The Eastern 1/3 of the county (approx.).

The following list is considered as those days for which holiday rates of wages for work performed apply: New Years Day, Memorial Day, Fourth of July, Labor Day, Thanksgiving Day, Christmas Day and Veterans Day in some classifications/counties. Generally, any of these holidays which fall on a Sunday is celebrated on the following Monday. This then makes work performed on that Monday payable at the appropriate overtime rate for holiday pay. Common practice in a given local may alter certain days of celebration. If in doubt, please check with IDOL.

Oil and chip resealing (O&C) means the application of road oils and liquid asphalt to coat an existing road surface, followed by application of aggregate chips or gravel to coated surface, and subsequent rolling of material to seal the surface.

EXPLANATION OF CLASSES

ASBESTOS - GENERAL - removal of asbestos material/mold and hazardous materials from any place in a building, including mechanical systems where those mechanical systems are to be removed. This includes the removal of asbestos materials/mold and hazardous materials from ductwork or pipes in a building when the building is to be demolished at the time or at some close future date. ASBESTOS - MECHANICAL - removal of asbestos material from mechanical systems, such as pipes, ducts, and boilers, where the mechanical systems are to remain.

CERAMIC TILE FINISHER, MARBLE FINISHER, TERRAZO FINISHER

Assisting, helping or supporting the tile, marble and terrazzo mechanic by performing their historic and traditional work assignments required to complete the proper installation of the work covered by said crafts. The term "Ceramic" is used for naming the classification only and is in no way a limitation of the product handled. Ceramic takes into consideration most hard tiles.

COMMUNICATIONS TECHNICIAN

Installation, operation, inspection, maintenance, repair and service of radio, television, recording, voice, sound and vision production and reproduction, telephone and telephone interconnect, facsimile, equipment and appliances used for domestic, commercial, educational and entertainment purposes, pulling of wire through conduit but not the installation of conduit.

LABORER, SKILLED - BUILDING AND HIGHWAY

The skilled laborer building (BLD) and heavy & highway (HWY) classification shall encompass the following types of work, irrespective of the site of the work: flagging, caisson worker plus depth, gunnite nozzle men, lead man on sewer work, welders, cutter burners and torchmen, chain saw operator, paving breaker, jackhammer and drill operators, layout man and/or drainage tile layer, steel form setter - street and highway, air tamping hammerman, signal man on crane, concrete saw operator, concrete saw operator walk behind, screenman on asphalt pavers, front end man on chip spreader, laborers tending masons with hot material or where foreign materials are used, multiple concrete duct - leadman, luteman, asphalt raker, curb asphalt machine operator, ready mix scalemen (permanent, portable or temporary plant), laborers handling masterplate or similar materials, laser beam operator, coring machine operator, plaster tenders, underpinning and shoring of buildings, material selector when working with fire-brick or castable material, fire watch, signaling of all power equipment, tree topper or trimmer when in connection with construction, and diver tender.

MATERIAL TESTER/INSPECTOR I: Hand coring and drilling for testing of materials; field inspection of uncured concrete and asphalt.

MATERIAL TESTER/INSPECTOR II: Field inspection of welds, structural steel, fireproofing, masonry, soil, facade, reinforcing steel, formwork, cured concrete, and concrete and asphalt batch plants; adjusting proportions of bituminous mixtures.

OPERATING ENGINEERS - BUILDING

Class 1. Mechanic; Asphalt Plant; Asphalt Spreader; Autograde; Backhoes w/Caisson attachment; Batch Plant; Benoto (require 2 engineers); Boiler and Throttle Valve; Caisson Rigs; Central Redi-Mix Plant; Combination Back Hoe Front End-Loader Machine; Compressor and Throttle Valve; Concrete Breaker (Truck Mounted); Concrete Conveyor; Concrete Paver over 27E cu. ft.; Concrete Paver 27E cu.ft. and under; Concrete Placer; Concrete Pump (Truck Mounted); Concrete Tower; Cranes, All; Cranes Hammerhead; Creter Crane; Spider Crane; Crusher, Stone, etc.; Derricks, All; Derricks, Traveling; Formless Curb and Gutter Machine; Grader, Elevating; Grouting Machines; Heavy Duty Self-Propelled Transporter or Prime Mover; Highlift Shovels or Front Endloader 2-1/4 yd. and over; Hoists, Elevators, outside type rack and pinion and similar machines; Hoists, One, Two and Three Drum; Hoists, Two Tugger One Floor; Hydraulic Backhoes; Hydraulic Boom Trucks; Hydro Vac (and similar equipment); Locomotives, All; Lubrication Technician; Manipulators; Motor Patrol; Pile Drivers and Skid Rig; Post Hole Digger; Pre-Stress Machine; Pump Cretes Dual Ram; Squeeze Cretes - Screw Type Pumps; Gypsum Bulker and Pump; Roto Mill Grinder; Scoops - Tractor Drawn; Slip-Form Paver; Straddle Buggies; Operation of Tieback Machine; Tournapull; Tractor with Boom and Side Boom; Trenching Machines.

Class 2. Boilers; Brick Forklift servicing seven (7) or more Brick Masons; Broom, All Power Propelled; Bulldozers; Concrete Mixer (Two Bag and Over); Conveyor, Portable; Forklift Trucks; Highlift Shovels or Front Endloaders under 2-1/4 yd; Hoists, Automatic; Hoists, inside Freight Elevators; Hoists, Sewer Dragging Machine; Hoists, Tugger Single Drum; Hydro Excavating (excluding hose work); Laser Screed; Rock Drill (self-propelled); Non Self-Loading Ejection Dump; Rock Drill (Truck Mounted); Rollers, All; Steam Generators; Tractors, All; Tractor Drawn Vibratory Roller; Winch Trucks with "A" Frame.

Class 3. Air Compressors; Combination - Small Equipment Operator; Generators; Heaters, Mechanical; Hoists, Inside Elevators - (Rheostat Manual Controlled); Hoists, Inside Elevators; Hydraulic Power Units (Pile Driving and Extracting); Lowboys; Pumps, over 3" (1 to 3 not to exceed a total of 300 ft.); Pumps, Well Points; Welding Machines (2 through 5); Winches, 4 Small Electric Drill Winches.

Class 4. Brick Forklift; Boom Trucks (Residential); Hoists, Inside Elevators push button with automatic doors; Oilers; Skidsteer Loaders; Vacuum Trucks (excluding hose work).

Class 5. Assistant Craft Foreman

Class 6. Mechanics and Welders

Class 7. Gradall

OPERATING ENGINEERS - HIGHWAY CONSTRUCTION

Class 1. Asphalt Plant; Asphalt Heater and Planer Combination; Asphalt Heater Scarfire; Asphalt Spreader; Autograder/Gomaco or other similar type machines: ABG Paver; Backhoes with Caisson Attachment; Belt Loader; Caisson Rigs; Car Dumper; Central Redi-Mix Plant; Combination Backhoe Front Endloader Machine; Concrete Breaker (Truck Mounted); Concrete Conveyor; Concrete Paver over 27E cu. ft.; Concrete Placer; Concrete Tube Float; Cranes, all attachments; Cranes, Tower of all types; Creter Crane; Spider Crane; Crusher, Stone, etc.; Derricks, All; Derrick Boats; Derricks, Traveling; Dredges; Elevators, Outside Type Rack & Pinion and Similar Machines; Formless Curb and Gutter Machine; Grader, Elevating; Grader, Motor Grader, Motor Patrol, Auto Patrol, Form Grader, Pull Grader, Subgrader; Guard Rail Post Driver Truck Mounted; Heavy Duty Self-Propelled Transporter or Prime Mover; Hoists, One, Two and Three Drum; Hydraulic Backhoes; Locomotives, All; Backhoes with Shear Attachments; Lubrication Technician; Manipulators; Mucking Machine; Pile Drivers and Skid Rig; Pre-Stress Machine; Pump Cretes Dual Ram; Rock Drill-Crawler or Skid Rig; Rock Drill - Truck Mounted; Roto Mill Grinder; Slip-Form Paver; Snow Melters; Soil Test Drill Rig (Truck Mounted); Straddle Buggies; Hydraulic Telescoping Form (Tunnel); Operation of Tieback Machine; Tractor Drawn Belt Loader; Tractor Drawn Belt Loader with attached pusher; Tractor with Boom; Tractaire with Attachments; Transfer Barrier Transfer Machine; Trenching Machine; Truck Mounted Concrete Pump with Boom; Raised or Blind Hole Drills (Tunnel Shaft); Underground Boring and/or Mining Machine; Wheel Excavator; Widener (APSCO).

Class 2. Batch Plant; Bituminous Mixer; Boiler and Throttle Valve; Bulldozers; Car Loader Trailing Conveyors; Combination Backhoe Front Endloader Machine (less than 1 cu. yd. Backhoe Bucket or over or with attachments); Compressor and Throttle Valve; Compressor, Common Receiver (3); Concrete Breaker or Hydro Hammer; Concrete Grinding Machine; Concrete Mixer or Paver 7S Series to and including 27 cu. ft.; Concrete Spreader; Concrete Curing Machine, Burlap Machine, Belting Machine and Sealing Machine; Concrete Wheel Saw; Conveyor Muck Cars (Haglund or Similar Type); Drills, All; Finishing Machine - Concrete; Forklifts; Highlift Shovels or Front Endloader; Hoist - Sewer Dragging Machine; Hydraulic Boom Trucks (All Attachments); Hydro-Blaster (requires 2 operators; one being Class 4); Hydro Excavating (excluding hose work); Laser Screed; Locomotives, Dinky; Oil Distributor; Off-Road Hauling Units (Including Articulating); Non Self-Loading Ejection Dump; Pump Cretes; Squeeze Cretes - Screw Type Pumps, Gypsum Bulker and Pump; Roller, Asphalt; Rotary Snow Plows; Rototiller, Seaman, etc., Self-Propelled; Self-Propelled Compactor; Spreader - Chip - Stone, etc.; Scraper; Scraper - Prime Mover in Tandem; Tractors, Push, Pulling Sheeps Foot, Disc, Compactor, etc.; Tug Boats; Mechanic Welders working in permanent shop.

Class 3. Boilers; Brooms, All Power Propelled; Cement Supply Tender; Compressor, Common Receiver (2); Concrete Mixer (Two Bag and Over); Conveyor, Portable; Farm-Type Tractors Used for Mowing, Seeding, etc.; Grouting Machine; Hoists, Automatic; Hoists, All Elevators; Hoists, Tugger Single Drum; Jeep Diggers; Low Boys; Pipe Jacking Machine; Post-Hole Digger; Power Saw, Concrete Power Driven; Pug Mills; Rollers, other than asphalt; Seed and Straw Blower; Steam Generators; Stump Machine Heaters, Mechanical; Winch Trucks with "A" Frame; Work Boats; Tamper - Form - Motor Driven.

Class 4. Air Compressor; Brick Forklifts (Servicing Seven (7) or more Brick Masons; Combination - Small Equipment Operator; Directional Boring Machine; Generators; Heaters, Mechanical; Hydraulic Power Unit (Pile Driving, Extracting, or Drilling); Hydro-Blaster (requires 2 operators - one being class 2); Light Plants, All (1 through 5); Pumps, over 3" (1 to 3 not to exceed a total of 300 ft.); Pumps, Well Points; Tractaire; Vacuum Trucks (excluding hose work); Welding Machines (2 through 5); Winches, 4 Small Electric Drill Winches.

Class 5. Brick Forklifts; Oilers; Skidsteer Loaders (All).

Class 6. Field Mechanics and Field Welders.

Class 7. Dowell Machine with Air Compressor; Gradall and machines of like nature.

TRUCK DRIVER - BUILDING, HEAVY AND HIGHWAY CONSTRUCTION Class 1. Drivers on 2 axle trucks hauling less than 9 ton. Air compressor and welding machines and brooms, including those pulled by separate units, truck driver helpers, warehouse employees, mechanic helpers, greasers and tiremen, pickup trucks when hauling materials, tools, or workers to and from and on-the-job site, and fork lifts up to 6,000 lb. capacity.

Class 2. Two or three axle trucks hauling more than 9 ton but hauling less than 16 ton. A-frame winch trucks, hydrolift trucks, vactor trucks or similar equipment when used for transportation purposes. Fork lifts over 6,000 lb. capacity, winch trucks, four axle combination units, and ticket writers.

Class 3. Two, three or four axle trucks hauling 16 ton or more. Drivers on water pulls, articulated dump trucks, mechanics and working forepersons, and dispatchers. Five axle or more combination units.

Class 4. Low Boy and Oil Distributors.

Class 5. Drivers who require special protective clothing while employed on hazardous waste work.

TRUCK DRIVER - OIL AND CHIP RESEALING ONLY.

This shall encompass laborers, workers and mechanics who drive contractor or subcontractor owned, leased, or hired pickup, dump, service, or oil distributor trucks. The work includes transporting materials and equipment (including but not limited to, oils, aggregate supplies, parts, machinery and tools) to or from the job site; distributing oil or liquid asphalt and aggregate; stock piling material when in connectin with the actual oil and chip contract. The Truck Driver (Oil & Chip Resealing) wage classification does not include supplier delivered materials.

Other Classifications of Work:

For definitions of classifications not otherwise set out, the Department generally has on file such definitions which are available. If a task to be performed is not subject to one of the classifications of pay set out, the Department will upon being contacted state which neighboring county has such a classification and provide such rate, such rate being deemed to exist by reference in this document. If no neighboring county rate applies to the task, the Department shall undertake a special determination, such special determination being then deemed to have existed under this determination. If a project requires these, or any classification not listed, please contact IDOL at 217-782-1710 for wage rates or clarifications.

LANDSCAPING

Landscaping work falls under the existing classifications for laborer, operating engineer and truck driver. The work performed by landscape plantsman and landscape laborer is covered by the existing classification of laborer. The work performed by landscape operators (regardless of equipment used or its size) is covered by the classifications of operating engineer. The work performed by landscape truck drivers (regardless of size of truck driven) is covered by the classifications of truck driver.

BDE SPECIAL PROVISIONS
For the April 28, 2023 and June 16, 2023 Lettings

The following special provisions indicated by a “check mark” are applicable to this contract and will be included by the Project Coordination and Implementation Section of the Bureau of Design & Environment (BDE).

	File Name	#		Special Provision Title	Effective	Revised
	80099	1	☐	Accessible Pedestrian Signals (APS)	April 1, 2003	Jan. 1, 2022
	80274	2	☐	Aggregate Subgrade Improvement	April 1, 2012	April 1, 2022
	80192	3	☐	Automated Flagger Assistance Devices	Jan. 1, 2008	April 1, 2023
	80173	4	☐	Bituminous Materials Cost Adjustments	Nov. 2, 2006	Aug. 1, 2017
	80426	5	☐	Bituminous Surface Treatment with Fog Seal	Jan. 1, 2020	Jan. 1, 2022
	80436	6	☐	Blended Finely Divided Minerals	April 1, 2021	
*	80241	7	☐	Bridge Demolition Debris	July 1, 2009	
*	5053I	8	☐	Building Removal	Sept. 1, 1990	Aug. 1, 2022
*	5026I	9	☐	Building Removal with Asbestos Abatement	Sept. 1, 1990	Aug. 1, 2022
	80384	10	☑	Compensable Delay Costs	June 2, 2017	April 1, 2019
*	80198	11	☐	Completion Date (via calendar days)	April 1, 2008	
*	80199	12	☐	Completion Date (via calendar days) Plus Working Days	April 1, 2008	
	80261	13	☐	Construction Air Quality – Diesel Retrofit	June 1, 2010	Nov. 1, 2014
	80434	14	☑	Corrugated Plastic Pipe (Culvert and Storm Sewer)	Jan. 1, 2021	
*	80029	15	☐	Disadvantaged Business Enterprise Participation	Sept. 1, 2000	Mar. 2, 2019
	80229	16	☐	Fuel Cost Adjustment	April 1, 2009	Aug. 1, 2017
	80447	17	☐	Grading and Shaping Ditches	Jan. 1, 2023	
	80433	18	☐	Green Preformed Thermoplastic Pavement Markings	Jan. 1, 2021	Jan. 1, 2022
	80443	19	☐	High Tension Cable Median Barrier Removal	April 1, 2022	
	80446	20	☐	Hot-Mix Asphalt - Longitudinal Joint Sealant	Nov. 1, 2022	
	80438	21	☐	Illinois Works Apprenticeship Initiative – State Funded Contracts	June 2, 2021	Sept. 2, 2021
	80045	22	☐	Material Transfer Device	June 15, 1999	Jan. 1, 2022
	80441	23	☐	Performance Graded Asphalt Binder	Jan. 1, 2023	
*	3426I	24	☐	Railroad Protective Liability Insurance	Dec. 1, 1986	Jan. 1, 2022
	80445	25	☑	Seeding	Nov. 1, 2022	
	80448	26	☐	Source of Supply and Quality Requirements	Jan. 2, 2023	
	80340	27	☐	Speed Display Trailer	April 2, 2014	Jan. 1, 2022
	80127	28	☐	Steel Cost Adjustment	April 2, 2004	Jan. 1, 2022
	80397	29	☐	Subcontractor and DBE Payment Reporting	April 2, 2018	
	80391	30	☑	Subcontractor Mobilization Payments	Nov. 2, 2017	April 1, 2019
	80437	31	☐	Submission of Payroll Records	April 1, 2021	Nov. 1, 2022
	80435	32	☐	Surface Testing of Pavements – IRI	Jan. 1, 2021	Jan. 1, 2023
	80410	33	☐	Traffic Spotters	Jan. 1, 2019	
*	20338	34	☐	Training Special Provisions	Oct. 15, 1975	Sept. 2, 2021
	80429	35	☐	Ultra-Thin Bonded Wearing Course	April 1, 2020	Jan. 1, 2022
	80439	36	☑	Vehicle and Equipment Warning Lights	Nov. 1, 2021	Nov. 1, 2022
	80440	37	☐	Waterproofing Membrane System	Nov. 1, 2021	
	80302	38	☐	Weekly DBE Trucking Reports	June 2, 2012	Nov. 1, 2021
	80427	39	☐	Work Zone Traffic Control Devices	Mar. 2, 2020	
*	80071	40	☑	Working Days	Jan. 1, 2002	

Highlighted items indicate a new or revised special provision for the letting.

An * indicates the special provision requires additional information from the designer, which needs to be submitted separately. The Project Coordination and Implementation Section will then include the information in the applicable special provision.

The following special provisions have been deleted from use.

File Name	Special Provision Title	Effective	Revised
5048I	Building Removal-Case II (Non-Friable Asbestos)	Sept. 1, 1990	April 1, 2010
5049I	Building Removal-Case III (Friable Asbestos)	Sept. 1, 1990	April 1, 2010

The following special provisions are in the 2023 Supplemental Specifications and Recurring Special Provisions.

File Name	Special Provision Title	New Location(s)	Effective	Revised
80293	Concrete Box Culverts with Skews > 30 Degrees and Design Fills ≤ 5 Feet	Articles 540.04 & 540.06	April 1, 2012	July 1, 2016
80311	Concrete End Sections for Pipe Culverts	Articles 540.07, 542.01, 542.02, 542.07, 542.11 & 542.12	Jan. 1, 2013	April 1, 2016
80422	High Tension Cable Median Barrier	Articles 644.02, 644.05, 782.01, 782.04, 782.07 & 1097.02	Jan. 1, 2020	Jan. 1, 2022
80442	Hot-Mix Asphalt	Articles 1030.09 & 1030.10	Jan. 1, 2022	Aug. 1, 2022
80444	Hot-Mix Asphalt – Patching	Errata – Article 442.08(b)	April 1, 2022	
80411	Luminaires, LED	Articles 801.05(a), 821.02(d), 821.03, 821.08 & 1067.01-1067.06	April 1, 2019	Jan. 1, 2022
80418	Mechanically Stabilized Earth Retaining Walls	Articles 1003.07 & 1004.06	Nov. 1, 2019	Nov. 1, 2020
80430	Portland Cement Concrete – Haul Time	Article 1020.11(a)(7)	July 1, 2020	
80395	Sloped Metal End Section for Pipe Culverts	Articles 540.07, 542.01, 542.02, 542.07, 542.11 & 542.12	Jan. 1, 2018	
80318	Traversable Pipe Grate for Concrete End Sections	Articles 540.04, 540.07, 540.08 & 542.01, 542.02, 542.07, 542.11 & 542.12	Jan. 1, 2013	Jan. 1, 2018

COMPENSABLE DELAY COSTS (BDE)

Effective: June 2, 2017
Revised: April 1, 2019

Revise Article 107.40(b) of the Standard Specifications to read:

"(b) Compensation. Compensation will not be allowed for delays, inconveniences, or damages sustained by the Contractor from conflicts with facilities not meeting the above definition; or if a conflict with a utility in an unanticipated location does not cause a shutdown of the work or a documentable reduction in the rate of progress exceeding the limits set herein. The provisions of Article 104.03 notwithstanding, compensation for delays caused by a utility in an unanticipated location will be paid according to the provisions of this Article governing minor and major delays or reduced rate of production which are defined as follows.

(1) Minor Delay. A minor delay occurs when the work in conflict with the utility in an unanticipated location is completely stopped for more than two hours, but not to exceed two weeks.

(2) Major Delay. A major delay occurs when the work in conflict with the utility in an unanticipated location is completely stopped for more than two weeks.

(3) Reduced Rate of Production Delay. A reduced rate of production delay occurs when the rate of production on the work in conflict with the utility in an unanticipated location decreases by more than 25 percent and lasts longer than seven calendar days."

Revise Article 107.40(c) of the Standard Specifications to read:

"(c) Payment. Payment for Minor, Major, and Reduced Rate of Production Delays will be made as follows.

(1) Minor Delay. Labor idled which cannot be used on other work will be paid for according to Article 109.04(b)(1) and (2) for the time between start of the delay and the minimum remaining hours in the work shift required by the prevailing practice in the area.

Equipment idled which cannot be used on other work, and which is authorized to standby on the project site by the Engineer, will be paid for according to Article 109.04(b)(4).

(2) Major Delay. Labor will be the same as for a minor delay.

Equipment will be the same as for a minor delay, except Contractor-owned equipment will be limited to two weeks plus the cost of move-out to either the

Contractor's yard or another job and the cost to re-mobilize, whichever is less. Rental equipment may be paid for longer than two weeks provided the Contractor presents adequate support to the Department (including lease agreement) to show retaining equipment on the job is the most economical course to follow and in the public interest.

(3) Reduced Rate of Production Delay. The Contractor will be compensated for the reduced productivity for labor and equipment time in excess of the 25 percent threshold for that portion of the delay in excess of seven calendar days. Determination of compensation will be in accordance with Article 104.02, except labor and material additives will not be permitted.

Payment for escalated material costs, escalated labor costs, extended project overhead, and extended traffic control will be determined according to Article 109.13."

Revise Article 108.04(b) of the Standard Specifications to read:

"(b) No working day will be charged under the following conditions.

(1) When adverse weather prevents work on the controlling item.

(2) When job conditions due to recent weather prevent work on the controlling item.

(3) When conduct or lack of conduct by the Department or its consultants, representatives, officers, agents, or employees; delay by the Department in making the site available; or delay in furnishing any items required to be furnished to the Contractor by the Department prevents work on the controlling item.

(4) When delays caused by utility or railroad adjustments prevent work on the controlling item.

(5) When strikes, lock-outs, extraordinary delays in transportation, or inability to procure critical materials prevent work on the controlling item, as long as these delays are not due to any fault of the Contractor.

(6) When any condition over which the Contractor has no control prevents work on the controlling item."

Revise Article 109.09(f) of the Standard Specifications to read:

"(f) Basis of Payment. After resolution of a claim in favor of the Contractor, any adjustment in time required for the work will be made according to Section 108. Any adjustment in the costs to be paid will be made for direct labor, direct materials, direct equipment, direct jobsite overhead, direct offsite overhead, and other direct costs allowed by the resolution. Adjustments in costs will not be made for interest charges, loss of anticipated profit, undocumented loss of efficiency, home office overhead and unabsorbed overhead

other than as allowed by Article 109.13, lost opportunity, preparation of claim expenses and other consequential indirect costs regardless of method of calculation.

The above Basis of Payment is an essential element of the contract and the claim cost recovery of the Contractor shall be so limited."

Add the following to Section 109 of the Standard Specifications.

"**109.13 Payment for Contract Delay.** Compensation for escalated material costs, escalated labor costs, extended project overhead, and extended traffic control will be allowed when such costs result from a delay meeting the criteria in the following table.

Contract Type	Cause of Delay	Length of Delay
Working Days	Article 108.04(b)(3) or Article 108.04(b)(4)	No working days have been charged for two consecutive weeks.
Completion Date	Article 108.08(b)(1) or Article 108.08(b)(7)	The Contractor has been granted a minimum two week extension of contract time, according to Article 108.08.

Payment for each of the various costs will be according to the following.

(a) Escalated Material and/or Labor Costs. When the delay causes work, which would have otherwise been completed, to be done after material and/or labor costs have increased, such increases will be paid. Payment for escalated material costs will be limited to the increased costs substantiated by documentation furnished by the Contractor. Payment for escalated labor costs will be limited to those items in Article 109.04(b)(1) and (2), except the 35 percent and 10 percent additives will not be permitted.

(b) Extended Project Overhead. For the duration of the delay, payment for extended project overhead will be paid as follows.

(1) Direct Jobsite and Offsite Overhead. Payment for documented direct jobsite overhead and documented direct offsite overhead, including onsite supervisory and administrative personnel, will be allowed according to the following table.

Original Contract Amount	Supervisory and Administrative Personnel
Up to $5,000,000	One Project Superintendent
Over $ 5,000,000 - up to $25,000,000	One Project Manager, One Project Superintendent or Engineer, and One Clerk
Over $25,000,000 - up to $50,000,000	One Project Manager, One Project Superintendent, One Engineer, and

	One Clerk
Over $50,000,000	One Project Manager, Two Project Superintendents, One Engineer, and One Clerk

(2) Home Office and Unabsorbed Overhead. Payment for home office and unabsorbed overhead will be calculated as 8 percent of the total delay cost.

(c) Extended Traffic Control. Traffic control required for an extended period of time due to the delay will be paid for according to Article 109.04.

When an extended traffic control adjustment is paid under this provision, an adjusted unit price as provided for in Article 701.20(a) for increase or decrease in the value of work by more than ten percent will not be paid.

Upon payment for a contract delay under this provision, the Contractor shall assign subrogation rights to the Department for the Department's efforts of recovery from any other party for monies paid by the Department as a result of any claim under this provision. The Contractor shall fully cooperate with the Department in its efforts to recover from another party any money paid to the Contractor for delay damages under this provision."

80384

CORRUGATED PLASTIC PIPE (CULVERT AND STORM SEWER) (BDE)

Effective: January 1, 2021

Revise Tables IIIA and IIIB of Article 542.03 and the storm sewers tables of Article 550.03 of the Standard Specifications to read:

(SEE TABLES ON NEXT 10 PAGES)

“PIPE CULVERTS
TABLE IIIA: PLASTIC PIPE PERMITTED
FOR A GIVEN PIPE DIAMETER AND FILL HEIGHT OVER THE TOP OF THE PIPE

Nominal Diameter (in.)	Type 1					Type 2					Type 3					Type 4				
	Fill Height: 3' and less, with 1' min					Fill Height: Greater than 3', not exceeding 10'					Fill Height: Greater than 10', not exceeding 15'					Fill Height: Greater than 15', not exceeding 20'				
	PVC	CPVC	PE	CPE	CPP	PVC	CPVC	PE	CPE	CPP	PVC	CPVC	PE	CPE	CPP	PVC	CPVC	PE	CPE	CPP
10	X	QPL	X	QPL	NA	X	QPL	X	QPL	NA	X	QPL	X	QPL	NA	X	QPL	X	QPL	NA
12	X	QPL	X	QPL	QPL	X	QPL	X	QPL	QPL	X	QPL	X	QPL	QPL	X	QPL	X	QPL	QPL
15	X	QPL	NA	QPL	QPL	X	QPL	NA	QPL	QPL	X	QPL	NA	QPL	QPL	X	QPL	NA	QPL	QPL
18	X	QPL	X	QPL	QPL	X	QPL	X	QPL	QPL	X	QPL	X	QPL	QPL	X	QPL	X	QPL	QPL
21	X	QPL	NA	QPL	NA	X	QPL	NA	QPL	NA	X	QPL	NA	QPL	NA	X	QPL	NA	NA	NA
24	X	QPL	X	QPL	QPL	X	QPL	X	QPL	QPL	X	QPL	X	QPL	QPL	X	QPL	X	NA	QPL
27	X	NA	NA	NA	NA	X	NA	NA	NA	NA	X	NA	NA	NA	NA	X	NA	NA	NA	NA
30	X	QPL	X	QPL	QPL	X	QPL	X	QPL	QPL	X	QPL	X	QPL	QPL	X	QPL	X	NA	QPL
36	X	QPL	X	QPL	QPL	X	QPL	X	QPL	QPL	X	QPL	X	QPL	QPL	X	QPL	X	NA	QPL
42	X	NA	X	QPL	QPL	X	NA	X	QPL	QPL	X	NA	X	NA	QPL	X	NA	X	NA	NA
48	X	NA	X	QPL	QPL	X	NA	X	QPL	QPL	X	NA	X	NA	QPL	X	NA	X	NA	NA
54	NA	NA	NA	NA	NA	NA	NA	NA	NA	NA	NA	NA	NA	NA	NA	NA	NA	NA	NA	NA
60	NA	NA	NA	QPL	QPL	NA	NA	NA	QPL	QPL	NA	NA	NA	NA	QPL	NA	NA	NA	NA	NA

Notes:
- PVC Polyvinyl Chloride Pipe
- CPVC Corrugated Polyvinyl Chloride Pipe with a Smooth Interior
- PE Polyethylene Pipe
- CPE Corrugated Polyethylene Pipe with a Smooth Interior
- CPP Corrugated Polypropylene Pipe with a Smooth Interior
- X Permitted
- QPL Permitted for the producers approved for that diameter in the Department’s qualified product list
- NA Not Acceptable

PIPE CULVERTS (metric)
TABLE IIIA: PLASTIC PIPE PERMITTED
FOR A GIVEN PIPE DIAMETER AND FILL HEIGHT OVER THE TOP OF THE PIPE

Nominal Diameter (mm)	Type 1					Type 2					Type 3					Type 4				
	Fill Height: 1 m and less, with 0.3 m min. cover					Fill Height: Greater than 1 m, not exceeding 3 m					Fill Height: Greater than 3 m, not exceeding 4.5 m					Fill Height: Greater than 4.5 m, not exceeding 6 m				
	PVC	CPVC	PE	CPE	CPP	PVC	CPVC	PE	CPE	CPP	PVC	CPVC	PE	CPE	CPP	PVC	CPVC	PE	CPE	CPP
250	X	QPL	X	QPL	NA	X	QPL	X	QPL	NA	X	QPL	X	QPL	NA	X	QPL	X	QPL	NA
300	X	QPL	X	QPL	QPL	X	QPL	X	QPL	QPL	X	QPL	X	QPL	QPL	X	QPL	X	QPL	QPL
375	X	QPL	NA	QPL	QPL	X	QPL	NA	QPL	QPL	X	QPL	NA	QPL	QPL	X	QPL	NA	QPL	QPL
450	X	QPL	X	QPL	QPL	X	QPL	X	QPL	QPL	X	QPL	X	QPL	QPL	X	QPL	X	QPL	QPL
525	X	QPL	NA	QPL	NA	X	QPL	NA	QPL	NA	X	QPL	NA	QPL	NA	X	QPL	NA	NA	NA
600	X	QPL	X	QPL	QPL	X	QPL	X	QPL	QPL	X	QPL	X	QPL	QPL	X	QPL	X	NA	QPL
675	X	NA	NA	NA	NA	X	NA	NA	NA	NA	X	NA	NA	NA	NA	X	NA	NA	NA	NA
750	X	QPL	X	QPL	QPL	X	QPL	X	QPL	QPL	X	QPL	X	QPL	QPL	X	QPL	X	NA	QPL
900	X	QPL	X	QPL	QPL	X	QPL	X	QPL	QPL	X	QPL	X	QPL	QPL	X	QPL	X	NA	QPL
1050	X	NA	X	QPL	QPL	X	NA	X	QPL	QPL	X	NA	X	NA	QPL	X	NA	X	NA	NA
1200	X	NA	X	QPL	QPL	X	NA	X	QPL	QPL	X	NA	X	NA	QPL	X	NA	X	NA	NA
1350	NA	NA	NA	NA	NA	NA	NA	NA	NA	NA	NA	NA	NA	NA	NA	NA	NA	NA	NA	NA
1500	NA	NA	NA	QPL	QPL	NA	NA	NA	QPL	QPL	NA	NA	NA	NA	QPL	NA	NA	NA	NA	NA

Notes:
- PVC Polyvinyl Chloride Pipe
- CPVC Corrugated Polyvinyl Chloride Pipe with a Smooth Interior
- PE Polyethylene Pipe
- CPE Corrugated Polyethylene Pipe with a Smooth Interior
- CPP Corrugated Polypropylene Pipe with a Smooth Interior
- X Permitted
- QPL Permitted for the producers approved for that diameter in the Department's qualified product list
- NA Not Acceptable

PIPE CULVERTS
TABLE IIIB: PLASTIC PIPE PERMITTED
FOR A GIVEN PIPE DIAMETER AND FILL HEIGHT OVER THE TOP OF THE PIPE

Nominal Diameter (in.)	Type 5					Type 6			Type 7		
	Fill Height: Greater than 20', not exceeding 25'					Fill Height: Greater than 25', not exceeding 30'			Fill Height: Greater than 30', not exceeding 35'		
	PVC	CPVC	PE	CPE	CPP	PVC	CPVC	PE	PVC	CPVC	PE
10	X	QPL	X	QPL	NA	X	QPL	X	X	QPL	X
12	X	QPL	X	QPL	QPL	X	QPL	X	X	QPL	X
15	X	QPL	NA	NA	QPL	X	QPL	NA	X	QPL	NA
18	X	QPL	X	NA	NA	X	QPL	X	X	QPL	X
21	X	QPL	NA	NA	NA	X	QPL	NA	X	QPL	NA
24	X	QPL	X	NA	NA	X	QPL	X	X	QPL	X
27	X	NA	NA	NA	NA	X	NA	NA	X	NA	NA
30	X	QPL	X	NA	QPL	X	QPL	X	X	QPL	X
36	X	QPL	X	NA	NA	X	QPL	X	X	QPL	X
42	X	NA	X	NA	NA	X	NA	X	X	NA	X
48	X	NA	X	NA	NA	X	NA	X	X	NA	X
54	NA	NA	NA	NA	NA	NA	NA	NA	NA	NA	NA
60	NA	NA	NA	NA	NA	NA	NA	NA	NA	NA	NA

Notes:
- PVC Polyvinyl Chloride Pipe
- CPVC Corrugated Polyvinyl Chloride Pipe with a Smooth Interior
- CPP Corrugated Polypropylene Pipe with a Smooth Interior
- X Permitted
- QPL Permitted for the producers approved for that diameter in the Department's qualified product list
- NA Not Acceptable

PIPE CULVERTS (metric)
TABLE IIIB: PLASTIC PIPE PERMITTED
FOR A GIVEN PIPE DIAMETER AND FILL HEIGHT OVER THE TOP OF THE PIPE

Nominal Diameter (mm)	Type 5					Type 6			Type 7		
	Fill Height: Greater than 6 m, not exceeding 7.5 m					Fill Height: Greater than 7.5 m, not exceeding 9 m			Fill Height: Greater than 9 m, not exceeding 10.5 m		
	PVC	CPVC	PE	CPE	CPP	PVC	CPVC	PE	PVC	CPVC	PE
250	X	QPL	X	QPL	NA	X	QPL	X	X	QPL	X
300	X	QPL	X	QPL	QPL	X	QPL	X	X	QPL	X
375	X	QPL	NA	NA	QPL	X	QPL	NA	X	QPL	NA
450	X	QPL	X	NA	NA	X	QPL	X	X	QPL	X
525	X	QPL	NA	NA	NA	X	QPL	NA	X	QPL	NA
600	X	QPL	X	NA	NA	X	QPL	X	X	QPL	X
675	X	NA	NA	NA	NA	X	NA	NA	X	NA	NA
750	X	QPL	X	NA	QPL	X	QPL	X	X	QPL	X
900	X	QPL	X	NA	NA	X	QPL	X	X	QPL	X
1000	X	NA	X	NA	NA	X	NA	X	X	NA	X
1200	X	NA	X	NA	NA	X	NA	X	X	NA	X
1350	NA	NA	NA	NA	NA	NA	NA	NA	NA	NA	NA
1500	NA	NA	NA	NA	NA	NA	NA	NA	NA	NA	NA

Notes:
- PVC Polyvinyl Chloride Pipe
- CPVC Corrugated Polyvinyl Chloride Pipe with a Smooth Interior
- CPP Corrugated Polypropylene Pipe with a Smooth Interior
- X Permitted
- QPL Permitted for the producers approved for that diameter in the Department's qualified product list
- NA Not Acceptable

STORM SEWERS
KIND OF MATERIAL PERMITTED AND STRENGTH REQUIRED
FOR A GIVEN PIPE DIAMETERS AND FILL HEIGHTS OVER THE TOP OF THE PIPE

Nominal Diameter in.	Type 1								Type 2							
	Fill Height: 3' and less, with 1' min.								Fill Height: Greater than 3', not exceeding 10'							
	RCCP	CSP	ESCP	PVC	CPVC	PE	CPE	CPP	RCCP	CSP	ESCP	PVC	CPVC	PE	CPE	CPP
10	NA	3	X	X	QPL	X	QPL	NA	NA	1	*X	X	QPL	X	QPL	NA
12	IV	NA	X	X	QPL	X	QPL	QPL	II	1	*X	X	QPL	X	QPL	QPL
15	IV	NA	NA	X	QPL	NA	QPL	QPL	II	1	*X	X	QPL	NA	QPL	QPL
18	IV	NA	NA	X	QPL	X	QPL	QPL	II	2	X	X	QPL	X	QPL	QPL
21	III	NA	NA	X	QPL	NA	QPL	NA	II	2	X	X	QPL	NA	QPL	NA
24	III	NA	NA	X	QPL	X	QPL	QPL	II	2	X	X	QPL	X	QPL	QPL
27	III	NA	NA	X	NA	NA	NA	NA	II	3	X	X	NA	NA	NA	NA
30	IV	NA	NA	X	QPL	X	QPL	QPL	II	3	X	X	QPL	X	QPL	QPL
33	III	NA	NA	NA	NA	NA	NA	NA	II	NA	X	NA	NA	NA	NA	NA
36	III	NA	NA	X	QPL	X	QPL	QPL	II	NA	X	X	QPL	X	QPL	QPL
42	II	NA	X	X	NA	X	QPL	QPL	II	NA	X	X	NA	X	QPL	QPL
48	II	NA	X	X	NA	X	QPL	QPL	II	NA	X	X	NA	X	QPL	QPL
54	II	NA	NA	NA	NA	NA	NA	NA	II	NA	NA	NA	NA	NA	NA	NA
60	II	NA	NA	NA	NA	NA	QPL	QPL	II	NA	NA	NA	NA	NA	QPL	QPL
66	II	NA	NA	NA	NA	NA	NA	NA	II	NA	NA	NA	NA	NA	NA	NA
72	II	NA	NA	NA	NA	NA	NA	NA	II	NA	NA	NA	NA	NA	NA	NA
78	II	NA	NA	NA	NA	NA	NA	NA	II	NA	NA	NA	NA	NA	NA	NA
84	II	NA	NA	NA	NA	NA	NA	NA	II	NA	NA	NA	NA	NA	NA	NA
90	II	NA	NA	NA	NA	NA	NA	NA	II	NA	NA	NA	NA	NA	NA	NA
96	II	NA	NA	NA	NA	NA	NA	NA	III	NA	NA	NA	NA	NA	NA	NA
102	II	NA	NA	NA	NA	NA	NA	NA	III	NA	NA	NA	NA	NA	NA	NA
108	II	NA	NA	NA	NA	NA	NA	NA	III	NA	NA	NA	NA	NA	NA	NA

RCCP Reinforced Concrete Culvert, Storm Drain, and Sewer Pipe
CSP Concrete Sewer, Storm drain, and Culvert Pipe (number in column indicates strength class)
ESCP Extra Strength Clay Pipe
PVC Polyvinyl Chloride Pipe
CPVC Corrugated Polyvinyl Chloride Pipe with a Smooth Interior
PE Polyethylene Pipe
CPE Corrugated Polyethylene Pipe with a Smooth Interior
CPP Corrugated Polypropylene Pipe with a Smooth Interior
X Permitted
QPL Permitted for the producers approved for that diameter in the Department's qualified product list
NA Not Acceptable
* May also use Standard Strength Clay Pipe

STORM SEWERS (metric)
KIND OF MATERIAL PERMITTED AND STRENGTH REQUIRED
FOR A GIVEN PIPE DIAMETERS AND FILL HEIGHTS OVER THE TOP OF THE PIPE

Nominal Diameter mm	Type 1								Type 2							
	Fill Height: 1 m and less, with 300 mm min,								Fill Height: Greater than 1 m, not exceeding 3 m							
	RCCP	CSP	ESCP	PVC	CPVC	PE	CPE	CPP	RCCP	CSP	ESCP	PVC	CPVC	PE	CPE	CPP
250	NA	3	X	X	QPL	X	QPL	NA	NA	1	*X	X	QPL	X	QPL	NA
300	IV	NA	X	X	QPL	X	QPL	QPL	II	1	*X	X	QPL	X	QPL	QPL
375	IV	NA	NA	X	QPL	NA	QPL	QPL	II	1	*X	X	QPL	NA	QPL	QPL
450	IV	NA	NA	X	QPL	X	QPL	QPL	II	2	X	X	QPL	X	QPL	QPL
525	III	NA	NA	X	QPL	NA	QPL	NA	II	2	X	X	QPL	NA	QPL	NA
600	III	NA	NA	X	QPL	X	QPL	QPL	II	2	X	X	QPL	X	QPL	QPL
675	III	NA	NA	X	NA	NA	NA	NA	II	3	X	X	NA	NA	NA	NA
750	IV	NA	NA	X	QPL	X	QPL	QPL	II	3	X	X	QPL	X	QPL	QPL
825	III	NA	NA	NA	NA	NA	NA	NA	II	NA	X	NA	NA	NA	NA	NA
900	III	NA	NA	X	QPL	X	QPL	QPL	II	NA	X	X	QPL	X	QPL	QPL
1050	II	NA	X	X	NA	X	QPL	QPL	II	NA	X	X	NA	X	QPL	QPL
1200	II	NA	X	X	NA	X	QPL	QPL	II	NA	X	X	NA	X	QPL	QPL
1350	II	NA	NA	NA	NA	NA	NA	NA	II	NA	NA	NA	NA	NA	NA	NA
1500	II	NA	NA	NA	NA	NA	QPL	QPL	II	NA	NA	NA	NA	NA	QPL	QPL
1650	II	NA	NA	NA	NA	NA	NA	NA	II	NA	NA	NA	NA	NA	NA	NA
1800	II	NA	NA	NA	NA	NA	NA	NA	II	NA	NA	NA	NA	NA	NA	NA
1950	II	NA	NA	NA	NA	NA	NA	NA	II	NA	NA	NA	NA	NA	NA	NA
2100	II	NA	NA	NA	NA	NA	NA	NA	II	NA	NA	NA	NA	NA	NA	NA
2250	II	NA	NA	NA	NA	NA	NA	NA	II	NA	NA	NA	NA	NA	NA	NA
2400	II	NA	NA	NA	NA	NA	NA	NA	III	NA	NA	NA	NA	NA	NA	NA
2550	II	NA	NA	NA	NA	NA	NA	NA	III	NA	NA	NA	NA	NA	NA	NA
2700	II	NA	NA	NA	NA	NA	NA	NA	III	NA	NA	NA	NA	NA	NA	NA

RCCP Reinforced Concrete Culvert, Storm Drain, and Sewer Pipe
CSP Concrete Sewer, Storm drain, and Culvert Pipe (number in column indicates strength class)
ESCP Extra Strength Clay Pipe
PVC Polyvinyl Chloride Pipe
CPVC Corrugated Polyvinyl Chloride Pipe with a Smooth Interior
PE Polyethylene Pipe
CPE Corrugated Polyethylene Pipe with a Smooth Interior
CPP Corrugated Polypropylene Pipe with a Smooth Interior
X Permitted
QPL Permitted for the producers approved for that diameter in the Department's qualified product list
NA Not Acceptable
* May also use Standard Strength Clay Pipe

STORM SEWERS
KIND OF MATERIAL PERMITTED AND STRENGTH REQUIRED
FOR A GIVEN PIPE DIAMETERS AND FILL HEIGHTS OVER THE TOP OF THE PIPE

Nominal Diameter in.	Type 3								Type 4							
	Fill Height: Greater than 10' not exceeding 15'								Fill Height: Greater than 15' not exceeding 20'							
	RCCP	CSP	ESCP	PVC	CPVC	PE	CPE	CPP	RCCP	CSP	ESCP	PVC	CPVC	PE	CPE	CPP
10	NA	2	X	X	QPL	X	QPL	NA	NA	3	X	X	QPL	X	QPL	NA
12	III	2	X	X	QPL	X	QPL	QPL	IV	NA	NA	X	QPL	X	QPL	QPL
15	III	3	X	X	QPL	NA	QPL	QPL	IV	NA	NA	X	QPL	NA	QPL	QPL
18	III	NA	X	X	QPL	X	QPL	QPL	IV	NA	NA	X	QPL	X	QPL	QPL
21	III	NA	NA	X	QPL	NA	QPL	NA	IV	NA	NA	X	QPL	NA	NA	NA
24	III	NA	NA	X	QPL	X	QPL	QPL	IV	NA	NA	X	QPL	X	NA	QPL
27	III	NA	NA	X	NA	NA	NA	NA	IV	NA	NA	X	NA	NA	NA	NA
30	III	NA	NA	X	QPL	X	QPL	QPL	IV	NA	NA	X	QPL	X	NA	QPL
33	III	NA	NA	NA	NA	NA	NA	NA	IV	NA	NA	NA	NA	NA	NA	NA
36	III	NA	NA	X	QPL	X	QPL	QPL	IV	NA	NA	X	QPL	X	NA	QPL
42	III	NA	NA	X	NA	X	NA	QPL	IV	NA	NA	X	NA	X	NA	NA
48	III	NA	NA	X	NA	X	NA	QPL	IV	NA	NA	X	NA	X	NA	NA
54	III	NA	NA	NA	NA	NA	NA	NA	IV	NA	NA	NA	NA	NA	NA	NA
60	III	NA	NA	NA	NA	NA	NA	QPL	IV	NA	NA	NA	NA	NA	NA	NA
66	III	NA	NA	NA	NA	NA	NA	NA	IV	NA	NA	NA	NA	NA	NA	NA
72	III	NA	NA	NA	NA	NA	NA	NA	IV	NA	NA	NA	NA	NA	NA	NA
78	III	NA	NA	NA	NA	NA	NA	NA	IV	NA	NA	NA	NA	NA	NA	NA
84	III	NA	NA	NA	NA	NA	NA	NA	IV	NA	NA	NA	NA	NA	NA	NA
90	III	NA	NA	NA	NA	NA	NA	NA	1680	NA	NA	NA	NA	NA	NA	NA
96	III	NA	NA	NA	NA	NA	NA	NA	1690	NA	NA	NA	NA	NA	NA	NA
102	III	NA	NA	NA	NA	NA	NA	NA	1700	NA	NA	NA	NA	NA	NA	NA
108	1360	NA	NA	NA	NA	NA	NA	NA	1710	NA	NA	NA	NA	NA	NA	NA

RCCP Reinforced Concrete Culvert, Storm Drain, and Sewer Pipe (RCCP with a number instead of a Roman numeral shall be furnished according to AASHTO M170 Section 6. This number represents the D-load to produce a 0.01 in crack.)
CSP Concrete Sewer, Storm drain, and Culvert Pipe (number in column indicates strength class)
ESCP Extra Strength Clay Pipe
PVC Polyvinyl Chloride Pipe
CPVC Corrugated Polyvinyl Chloride Pipe with a Smooth Interior
PE Polyethylene Pipe
CPE Corrugated Polyethylene Pipe with a Smooth Interior
CPP Corrugated Polypropylene Pipe with a Smooth Interior
X Permitted
QPL Permitted for the producers approved for that diameter in the Department's qualified product list
NA Not Acceptable

STORM SEWERS (metric)
KIND OF MATERIAL PERMITTED AND STRENGTH REQUIRED
FOR A GIVEN PIPE DIAMETERS AND FILL HEIGHTS OVER THE TOP OF THE PIPE

Nominal Diameter mm	Type 3								Type 4							
	Fill Height: Greater than 3 m, not exceeding 4.5 m								Fill Height: Greater than 4.5 m, not exceeding 6 m							
	RCCP	CSP	ESCP	PVC	CPVC	PE	CPE	CPP	RCCP	CSP	ESCP	PVC	CPVC	PE	CPE	CPP
250	NA	2	X	X	QPL	X	QPL	NA	NA	3	X	X	QPL	X	QPL	NA
300	III	2	X	X	QPL	X	QPL	QPL	IV	NA	NA	X	QPL	X	QPL	QPL
375	III	3	X	X	QPL	NA	QPL	QPL	IV	NA	NA	X	QPL	NA	QPL	QPL
450	III	NA	X	X	QPL	X	QPL	QPL	IV	NA	NA	X	QPL	X	QPL	QPL
525	III	NA	NA	X	QPL	NA	QPL	NA	IV	NA	NA	X	QPL	NA	NA	NA
600	III	NA	NA	X	QPL	X	QPL	QPL	IV	NA	NA	X	QPL	X	NA	QPL
675	III	NA	NA	X	NA	NA	NA	NA	IV	NA	NA	X	NA	NA	NA	NA
750	III	NA	NA	X	QPL	X	QPL	QPL	IV	NA	NA	X	QPL	X	NA	QPL
825	III	NA	NA	NA	NA	NA	NA	NA	IV	NA	NA	NA	NA	NA	NA	NA
900	III	NA	NA	X	QPL	X	QPL	QPL	IV	NA	NA	X	QPL	X	NA	QPL
1050	III	NA	NA	X	NA	X	NA	QPL	IV	NA	NA	X	NA	X	NA	NA
1200	III	NA	NA	X	NA	X	NA	QPL	IV	NA	NA	X	NA	X	NA	NA
1350	III	NA	NA	NA	NA	NA	NA	NA	IV	NA	NA	NA	NA	NA	NA	NA
1500	III	NA	NA	NA	NA	NA	NA	QPL	IV	NA	NA	NA	NA	NA	NA	NA
1650	III	NA	NA	NA	NA	NA	NA	NA	IV	NA	NA	NA	NA	NA	NA	NA
1800	III	NA	NA	NA	NA	NA	NA	NA	IV	NA	NA	NA	NA	NA	NA	NA
1950	III	NA	NA	NA	NA	NA	NA	NA	IV	NA	NA	NA	NA	NA	NA	NA
2100	III	NA	NA	NA	NA	NA	NA	NA	IV	NA	NA	NA	NA	NA	NA	NA
2250	III	NA	NA	NA	NA	NA	NA	NA	80	NA	NA	NA	NA	NA	NA	NA
2400	III	NA	NA	NA	NA	NA	NA	NA	80	NA	NA	NA	NA	NA	NA	NA
2550	III	NA	NA	NA	NA	NA	NA	NA	80	NA	NA	NA	NA	NA	NA	NA
2700	70	NA	NA	NA	NA	NA	NA	NA	80	NA	NA	NA	NA	NA	NA	NA

RCCP Reinforced Concrete Culvert, Storm Drain, and Sewer Pipe (RCCP with a number instead of a Roman numeral shall be furnished according to AASHTO M170 Section 6. This number represents the D-load to produce a 25.4 micro-meter crack.)
CSP Concrete Sewer, Storm drain, and Culvert Pipe (number in column indicates strength class)
ESCP Extra Strength Clay Pipe
PVC Polyvinyl Chloride Pipe
CPVC Corrugated Polyvinyl Chloride Pipe with a Smooth Interior
PE Polyethylene Pipe
CPE Corrugated Polyethylene Pipe with a Smooth Interior
CPP Corrugated Polypropylene Pipe with a Smooth Interior
X Permitted
QPL Permitted for the producers approved for that diameter in the Department's qualified product list
NA Not Acceptable

STORM SEWERS
KIND OF MATERIAL PERMITTED AND STRENGTH REQUIRED
FOR A GIVEN PIPE DIAMETERS AND FILL HEIGHTS OVER THE TOP OF THE PIPE

Nominal Diameter in.	Type 5						Type 6				Type 7			
	Fill Height: Greater than 20', not exceeding 25'						Fill Height: Greater than 25', not exceeding 30'				Fill Height: Greater than 30', not exceeding 35'			
	RCCP	PVC	CPVC	PE	CPE	CPP	RCCP	PVC	CPVC	PE	RCCP	PVC	CPVC	PE
10	NA	X	QPL	X	QPL	NA	NA	X	QPL	X	NA	X	QPL	X
12	IV	X	QPL	X	QPL	QPL	V	X	QPL	X	V	X	QPL	X
15	IV	X	QPL	NA	NA	QPL	V	X	QPL	NA	V	X	QPL	NA
18	IV	X	QPL	X	NA	NA	V	X	QPL	X	V	X	QPL	X
21	IV	X	QPL	NA	NA	NA	V	X	QPL	NA	V	X	QPL	NA
24	IV	X	QPL	X	NA	NA	V	X	QPL	X	V	X	QPL	X
27	IV	X	NA	NA	NA	NA	V	X	NA	NA	V	X	NA	NA
30	IV	X	QPL	X	NA	QPL	V	X	QPL	X	V	X	QPL	X
33	IV	NA	NA	NA	NA	NA	V	NA	NA	NA	V	NA	NA	NA
36	IV	X	QPL	X	NA	NA	V	X	QPL	X	V	X	QPL	X
42	IV	X	NA	X	NA	NA	V	X	NA	X	V	X	NA	X
48	IV	X	NA	X	NA	NA	V	X	NA	X	V	X	NA	X
54	IV	NA	NA	NA	NA	NA	V	NA	NA	NA	V	NA	NA	NA
60	IV	NA	NA	NA	NA	NA	V	NA	NA	NA	V	NA	NA	NA
66	IV	NA	NA	NA	NA	NA	V	NA	NA	NA	V	NA	NA	NA
72	V	NA	NA	NA	NA	NA	V	NA	NA	NA	V	NA	NA	NA
78	2020	NA	NA	NA	NA	NA	2370	NA	NA	NA	2730	NA	NA	NA
84	2020	NA	NA	NA	NA	NA	2380	NA	NA	NA	2740	NA	NA	NA
90	2030	NA	NA	NA	NA	NA	2390	NA	NA	NA	2750	NA	NA	NA
96	2040	NA	NA	NA	NA	NA	2400	NA	NA	NA	2750	NA	NA	NA
102	2050	NA	NA	NA	NA	NA	2410	NA	NA	NA	2760	NA	NA	NA
108	2060	NA	NA	NA	NA	NA	2410	NA	NA	NA	2770	NA	NA	NA

RCCP Reinforced Concrete Culvert, Storm Drain, and Sewer Pipe (RCCP with a number instead of a Roman numeral shall be furnished according to AASHTO M170 Section 6. This number represents the D-load to produce a 0.01 in crack.)
PVC Polyvinyl Chloride Pipe
CPVC Corrugated Polyvinyl Chloride Pipe with a Smooth Interior
PE Polyethylene Pipe
CPE Corrugated Polyethylene Pipe with a Smooth Interior
CPP Corrugated Polypropylene Pipe with a Smooth Interior
X Permitted
QPL Permitted for the producers approved for that diameter in the Department's qualified product list
NA Not Acceptable

STORM SEWERS (metric)
KIND OF MATERIAL PERMITTED AND STRENGTH REQUIRED
FOR A GIVEN PIPE DIAMETERS AND FILL HEIGHTS OVER THE TOP OF THE PIPE

Nominal Diameter mm	Type 5						Type 6				Type 7			
	Fill Height: Greater than 6 m, not exceeding 7.5 m						Fill Height: Greater than 7.5 m, not exceeding 9 m				Fill Height: Greater than 9 m, not exceeding 10.5 m			
	RCCP	PVC	CPVC	PE	CPE	CPP	RCCP	PVC	CPVC	PE	RCCP	PVC	CPVC	PE
250	NA	X	QPL	X	QPL	NA	NA	X	QPL	X	NA	X	QPL	X
300	IV	X	QPL	X	QPL	QPL	V	X	QPL	X	V	X	QPL	X
375	IV	X	QPL	NA	NA	QPL	V	X	QPL	NA	V	X	QPL	NA
450	IV	X	QPL	X	NA	NA	V	X	QPL	X	V	X	QPL	X
525	IV	X	QPL	NA	NA	NA	V	X	QPL	NA	V	X	QPL	NA
600	IV	X	QPL	X	NA	NA	V	X	QPL	X	V	X	QPL	X
675	IV	X	NA	NA	NA	NA	V	X	NA	NA	V	X	NA	NA
750	IV	X	QPL	X	NA	QPL	V	X	QPL	X	V	X	QPL	X
825	IV	NA	NA	NA	NA	NA	V	NA	NA	NA	V	NA	NA	NA
900	IV	X	QPL	X	NA	NA	V	X	QPL	X	V	X	QPL	X
1050	IV	X	NA	X	NA	NA	V	X	NA	X	V	X	NA	X
1200	IV	X	NA	X	NA	NA	V	X	NA	X	V	X	NA	X
1350	IV	NA	NA	NA	NA	NA	V	NA	NA	NA	V	NA	NA	NA
1500	IV	NA	NA	NA	NA	NA	V	NA	NA	NA	V	NA	NA	NA
1650	IV	NA	NA	NA	NA	NA	V	NA	NA	NA	V	NA	NA	NA
1800	V	NA	NA	NA	NA	NA	V	NA	NA	NA	V	NA	NA	NA
1950	100	NA	NA	NA	NA	NA	110	NA	NA	NA	130	NA	NA	NA
2100	100	NA	NA	NA	NA	NA	110	NA	NA	NA	130	NA	NA	NA
2250	100	NA	NA	NA	NA	NA	110	NA	NA	NA	130	NA	NA	NA
2400	100	NA	NA	NA	NA	NA	120	NA	NA	NA	130	NA	NA	NA
2550	100	NA	NA	NA	NA	NA	120	NA	NA	NA	130	NA	NA	NA
2700	100	NA	NA	NA	NA	NA	120	NA	NA	NA	130	NA	NA	NA

RCCP Reinforced Concrete Culvert, Storm Drain, and Sewer Pipe (RCCP with a number instead of a Roman numeral shall be furnished according to AASHTO M170 Section 6. This number represents the D-load to produce a 25.4 micro-meter crack.)
PVC Polyvinyl Chloride Pipe
CPVC Corrugated Polyvinyl Chloride Pipe with a Smooth Interior
PE Polyethylene Pipe
CPE Corrugated Polyethylene Pipe with a Smooth Interior
CPP Corrugated Polypropylene Pipe with a Smooth Interior
X Permitted
QPL Permitted for the producers approved for that diameter in the Department's qualified product list
NA Not Acceptable"

Revise the first paragraph of Article 1040.03 of the Standard Specifications to read:

"**1040.03 Polyvinyl Chloride (PVC) Pipe.** Acceptance testing of PVC pipe and fittings shall be accomplished during the same construction season in which they are installed. The pipe shall meet the following additional requirements."

Revise Article 1040.04(b) of the Standard Specifications to read:

"(b) Corrugated PE Pipe with a Smooth Interior. The manufacturer shall be listed as compliant through the NTPEP program and the pipe shall be according to AASHTO M 294 (nominal size – 12 to 60 in. (300 to 1500 mm)). The pipe shall be Type S or D."

Revise the first paragraph of Article 1040.04(d) of the Standard Specifications to read:

"(d) PE Pipe with a Smooth Interior. The pipe shall be according to ASTM F 714 (DR 32.5) with a minimum cell classification of PE 335434 as defined in ASTM D 3350."

Revise the first paragraph of Article 1040.08 of the Standard Specifications to read:

"**1040.08 Polypropylene (PP) Pipe.** Storage and handling shall be according to the manufacturer's recommendations, except in no case shall the pipe be exposed to direct sunlight for more than six months. Acceptance testing of the pipe shall be accomplished during the same construction season in which it is installed. The pipe shall meet the following additional requirements."

80434

SEEDING (BDE)

Effective: November 1, 2022

Revise Article 250.07 of the Standard Specifications to read:

"**250.07 Seeding Mixtures.** The classes of seeding mixtures and combinations of mixtures will be designated in the plans.

When an area is to be seeded with two or more seeding classes, those mixtures shall be applied separately on the designated area within a seven day period. Seeding shall occur prior to placement of mulch cover. A Class 7 mixture can be applied at any time prior to applying any seeding class or added to them and applied at the same time.

TABLE 1 - SEEDING MIXTURES			
Class - Type		Seeds	lb/acre (kg/hectare)
1	Lawn Mixture 1/	Kentucky Bluegrass	100 (110)
		Perennial Ryegrass	60 (70)
		Festuca rubra ssp. r*ubra* (Creeping Red Fescue)	40 (50)
1A	Salt Tolerant Lawn Mixture 1/	Kentucky Bluegrass	60 (70)
		Perennial Ryegrass	20 (20)
		Festuca rubra ssp. *rubra* (Creeping Red Fescue)	20 (20)
		Festuca brevipilla (Hard Fescue)	20 (20)
		Puccinellia distans (Fults Saltgrass or Salty Alkaligrass)	60 (70)
1B	Low Maintenance Lawn Mixture 1/	Turf-Type Fine Fescue 3/	150 (170)
		Perennial Ryegrass	20 (20)
		Red Top	10 (10)
		Festuca rubra ssp. *rubra* (Creeping Red Fescue)	20 (20)
2	Roadside Mixture 1/	*Lolium arundinaceum* (Tall Fescue)	100 (110)
		Perennial Ryegrass	50 (55)
		Festuca rubra ssp. r*ubra* (Creeping Red Fescue)	40 (50)
		Red Top	10 (10)
2A	Salt Tolerant Roadside Mixture 1/	*Lolium arundinaceum* (Tall Fescue)	60 (70)
		Perennial Ryegrass	20 (20)
		Festuca rubra ssp. *rubra* (Creeping Red Fescue)	30 (20)
		Festuca brevipila (Hard Fescue)	30 (20)
		Puccinellia distans (Fults Saltgrass or Salty Alkaligrass)	60 (70)
3	Northern Illinois Slope Mixture 1/	*Elymus canadensis* (Canada Wild Rye) 5/	5 (5)
		Perennial Ryegrass	20 (20)
		Alsike Clover 4/	5 (5)
		Desmanthus illinoensis (Illinois Bundleflower) 4/ 5/	2 (2)
		Schizachyrium scoparium (Little Bluestem) 5/	12 (12)
		Bouteloua curtipendula (Side-Oats Grama) 5/	10 (10)
		Puccinellia distans (Fults Saltgrass or Salty Alkaligrass)	30 (35)
		Oats, Spring	50 (55)
		Slender Wheat Grass 5/	15 (15)
		Buffalo Grass 5/ 7/	5 (5)
3A	Southern Illinois Slope Mixture 1/	Perennial Ryegrass	20 (20)
		Elymus canadensis (Canada Wild Rye) 5/	20 (20)
		Panicum virgatum (Switchgrass) 5/	10 (10)
		Schizachyrium scoparium (Little Blue Stem) 5/	12 (12)
		Bouteloua curtipendula (Side-Oats Grama) 5/	10 (10)
		Dalea candida (White Prairie Clover) 4/ 5/	5 (5)
		Rudbeckia hirta (Black-Eyed Susan) 5/	5 (5)
		Oats, Spring	50 (55)

Class – Type		Seeds	lb/acre (kg/hectare)
4	Native Grass 2/ 6/	*Andropogon gerardi* (Big Blue Stem) 5/	4 (4)
		Schizachyrium scoparium (Little Blue Stem) 5/	5 (5)
		Bouteloua curtipendula (Side-Oats Grama) 5/	5 (5)
		Elymus canadensis (Canada Wild Rye) 5/	1 (1)
		Panicum virgatum (Switch Grass) 5/	1 (1)
		Sorghastrum nutans (Indian Grass) 5/	2 (2)
		Annual Ryegrass	25 (25)
		Oats, Spring	25 (25)
		Perennial Ryegrass	15 (15)
4A	Low Profile Native Grass 2/ 6/	*Schizachyrium scoparium* (Little Blue Stem) 5/	5 (5)
		Bouteloua curtipendula (Side-Oats Grama) 5/	5 (5)
		Elymus canadensis (Canada Wild Rye) 5/	1 (1)
		Sporobolus heterolepis (Prairie Dropseed) 5/	0.5 (0.5)
		Annual Ryegrass	25 (25)
		Oats, Spring	25 (25)
		Perennial Ryegrass	15 (15)
4B	Wetland Grass and Sedge Mixture 2/ 6/	Annual Ryegrass	25 (25)
		Oats, Spring	25 (25)
		Wetland Grasses (species below) 5/	6 (6)

Species:	% By Weight
Calamagrostis canadensis (Blue Joint Grass)	12
Carex lacustris (Lake-Bank Sedge)	6
Carex slipata (Awl-Fruited Sedge)	6
Carex stricta (Tussock Sedge)	6
Carex vulpinoidea (Fox Sedge)	6
Eleocharis acicularis (Needle Spike Rush)	3
Eleocharis obtusa (Blunt Spike Rush)	3
Glyceria striata (Fowl Manna Grass)	14
Juncus effusus (Common Rush)	6
Juncus tenuis (Slender Rush)	6
Juncus torreyi (Torrey's Rush)	6
Leersia oryzoides (Rice Cut Grass)	10
Scirpus acutus (Hard-Stemmed Bulrush)	3
Scirpus atrovirens (Dark Green Rush)	3
Bolboschoenus fluviatilis (River Bulrush)	3
Schoenoplectus tabernaemontani (Softstem Bulrush)	3
Spartina pectinata (Cord Grass)	4

Class – Type		Seeds	lb/acre (kg/hectare)
5	Forb with Annuals Mixture 2/ 5/ 6/	Annuals Mixture (Below) Forb Mixture (Below)	1 (1) 10 (10)

Annuals Mixture - Mixture not exceeding 25 % by weight of any one species, of the following:

Coreopsis lanceolata (Sand Coreopsis)
Leucanthemum maximum (Shasta Daisy)
Gaillardia pulchella (Blanket Flower)
Ratibida columnifera (Prairie Coneflower)
Rudbeckia hirta (Black-Eyed Susan)

Forb Mixture - Mixture not exceeding 5 % by weight PLS of any one species, of the following:

Amorpha canescens (Lead Plant) 4/
Anemone cylindrica (Thimble Weed)
Asclepias tuberosa (Butterfly Weed)
Aster azureus (Sky Blue Aster)
Symphyotrichum leave (Smooth Aster)
Aster novae-angliae (New England Aster)
Baptisia leucantha (White Wild Indigo) 4/
Coreopsis palmata (Prairie Coreopsis)
Echinacea pallida (Pale Purple Coneflower)
Eryngium yuccifolium (Rattlesnake Master)
Helianthus mollis (Downy Sunflower)
Heliopsis helianthoides (Ox-Eye)
Liatris aspera (Rough Blazing Star)
Liatris pycnostachya (Prairie Blazing Star)
Monarda fistulosa (Prairie Bergamot)
Parthenium integrifolium (Wild Quinine)
Dalea candida (White Prairie Clover) 4/
Dalea purpurea (Purple Prairie Clover) 4/
Physostegia virginiana (False Dragonhead)
Potentilla arguta (Prairie Cinquefoil)
Ratibida pinnata (Yellow Coneflower)
Rudbeckia subtomentosa (Fragrant Coneflower)
Silphium laciniatum (Compass Plant)
Silphium terebinthinaceum (Prairie Dock)
Oligoneuron rigidum (Rigid Goldenrod)
Tradescantia ohiensis (Spiderwort)
Veronicastrum virginicum (Culver's Root)

Class – Type		Seeds	lb/acre (kg/hectare)
5A	Large Flower Native Forb Mixture 2/ 5/ 6/	Forb Mixture (see below)	5 (5)
		Species:	% By Weight
		Aster novae-angliae (New England Aster)	5
		Echinacea pallida (Pale Purple Coneflower)	10
		Helianthus mollis (Downy Sunflower)	10
		Heliopsis helianthoides (Ox-Eye)	10
		Liatris pycnostachya (Prairie Blazing Star)	10
		Ratibida pinnata (Yellow Coneflower)	5
		Rudbeckia hirta (Black-Eyed Susan)	10
		Silphium laciniatum (Compass Plant)	10
		Silphium terebinthinaceum (Prairie Dock)	20
		Oligoneuron rigidum (Rigid Goldenrod)	10
5B	Wetland Forb 2/ 5/ 6/	Forb Mixture (see below)	2 (2)
		Species:	% By Weight
		Acorus calamus (Sweet Flag)	3
		Angelica atropurpurea (Angelica)	6
		Asclepias incarnata (Swamp Milkweed)	2
		Aster puniceus (Purple Stemmed Aster)	10
		Bidens cernua (Beggarticks)	7
		Eutrochium maculatum (Spotted Joe Pye Weed)	7
		Eupatorium perfoliatum (Boneset)	7
		Helenium autumnale (Autumn Sneeze Weed)	2
		Iris virginica shrevei (Blue Flag Iris)	2
		Lobelia cardinalis (Cardinal Flower)	5
		Lobelia siphilitica (Great Blue Lobelia)	5
		Lythrum alatum (Winged Loosestrife)	2
		Physostegia virginiana (False Dragonhead)	5
		Persicaria pensylvanica (Pennsylvania Smartweed)	10
		Persicaria lapathifolia (Curlytop Knotweed)	10
		Pychanthemum virginianum (Mountain Mint)	5
		Rudbeckia laciniata (Cut-leaf Coneflower)	5
		Oligoneuron riddellii (Riddell Goldenrod)	2
		Sparganium eurycarpum (Giant Burreed)	5
6	Conservation Mixture 2/ 6/	*Schizachyrium scoparium* (Little Blue Stem) 5/	5 (5)
		Elymus canadensis (Canada Wild Rye) 5/	2 (2)
		Buffalo Grass 5/ 7/	5 (5)
		Vernal Alfalfa 4/	15 (15)
		Oats, Spring	48 (55)
6A	Salt Tolerant Conservation Mixture 2/ 6/	*Schizachyrium scoparium* (Little Blue Stem) 5/	5 (5)
		Elymus canadensis (Canada Wild Rye) 5/	2 (2)
		Buffalo Grass 5/ 7/	5 (5)
		Vernal Alfalfa 4/	15 (15)
		Oats, Spring	48 (55)
		Puccinellia distans (Fults Saltgrass or Salty Alkaligrass)	20 (20)
7	Temporary Turf Cover Mixture	Perennial Ryegrass	50 (55)
		Oats, Spring	64 (70)

Notes:

1/ Seeding shall be performed when the ambient temperature has been between 45 ºF (7 ºC) and 80 ºF (27 ºC) for a minimum of seven (7) consecutive days and is forecasted to be the same for the next five (5) days according to the National Weather Service.
2/ Seeding shall be performed in late fall through spring beginning when the ambient temperature has been below 45 ºF (7 ºC) for a minimum of seven (7) consecutive days and ending when the ambient temperature exceeds 80 ºF (27 ºC) according to the National Weather Service.
3/ Specific variety as shown in the plans or approved by the Engineer.
4/ Inoculation required.
5/ Pure Live Seed (PLS) shall be used.
6/ Fertilizer shall not be used.
7/ Seed shall be primed with KNO_3 to break dormancy and dyed to indicate such.

Seeding will be inspected after a period of establishment. The period of establishment shall be six (6) months minimum, but not to exceed nine (9) months. After the period of establishment, areas not exhibiting 75 percent uniform growth shall be interseeded or reseeded, as determined by the Engineer, at no additional cost to the Department."

80445

SUBCONTRACTOR MOBILIZATION PAYMENTS (BDE)

Effective: November 2, 2017
Revised: April 1, 2019

Replace the second paragraph of Article 109.12 of the Standard Specifications with the following:

"This mobilization payment shall be made at least seven days prior to the subcontractor starting work. The amount paid shall be at the following percentage of the amount of the subcontract reported on form BC 260A submitted for the approval of the subcontractor's work.

Value of Subcontract Reported on Form BC 260A	Mobilization Percentage
Less than $10,000	25%
$10,000 to less than $20,000	20%
$20,000 to less than $40,000	18%
$40,000 to less than $60,000	16%
$60,000 to less than $80,000	14%
$80,000 to less than $100,000	12%
$100,000 to less than $250,000	10%
$250,000 to less than $500,000	9%
$500,000 to $750,000	8%
Over $750,000	7%"

80391

VEHICLE AND EQUIPMENT WARNING LIGHTS (BDE)

Effective: November 1, 2021
Revised: November 1, 2022

Add the following paragraph after the first paragraph of Article 701.08 of the Standard Specifications:

"The Contractor shall equip all vehicles and equipment with high-intensity oscillating, rotating, or flashing, amber or amber-and-white, warning lights which are visible from all directions. In accordance with 625 ILCS 5/12-215, the lights may only be in operation while the vehicle or equipment is engaged in construction operations."

80439

WORKING DAYS (BDE)

Effective: January 1, 2002

The Contractor shall complete the work within **30** working days.

80071

CITY OF LA SALLE

LONG TERM CONTROL PLAN
HEGELER PARK TO SOBIESKI STREET DETENTION
SEWER SEPARATION - 2023

SPECIAL PROVISIONS

The following Special Provisions supplement the "Standard Specifications for the Road and Bridge Construction", adopted January 1, 2022, (hereinafter referred to as the Standard Specifications); the latest edition of the "Illinois Manual on Uniform Traffic Control Devices for Streets and Highways"; the "Manual of Test Procedures for Materials" in effect on the date of the invitation for bids; the Division 1 General Requirements and Covenants; the Division II Technical Specifications; the "Standard Specifications for Water and Sewer Main Construction in Illinois", Latest Edition; and the Supplemental Specifications and Recurring Special Provisions indicated on the Check Sheet included herein apply to and govern the construction of this project and in case of conflict with any part or parts of said specifications, the said special provisions shall take precedence and shall govern.

JURISDICTION
Jurisdiction of this improvement will be vested in the Mayor and City Council of the City of LaSalle, LaSalle County, Illinois. The City of LaSalle City Engineer is the duly authorized Engineer for this construction.

SCOPE OF WORK
This project shall include, but not limited to the installation of 296 feet of 24" storm sewer, 438 feet of 30" storm sewer, 1 – 4' manhole, 3 – 5' manholes, 2 inlet special #4, pavement patching, concrete curb and gutter, surface restoration, including all other work as further described in the plans and specifications for said work, including all other work appurtenant thereunto.

EXAMINATION OF PLANS, SPECIFICATIONS, SPECIAL PROVISIONS AND SITE OF WORK
The bidder shall comply with Section 2-3 of the Standard Specifications for Water and Sewer Construction in Illinois, Current Edition relative to examination of plans, specifications, special provisions, and site of work and hereby is advised that due to the nature of the contract, he should place special emphasis on inspection in detail of the site of the proposed work and familiarization with all local conditions, traffic, and otherwise, affecting the contract and the detailed requirements for construction.

SUBMITTALS
The Contractor shall provide four (4) identical sets of submittal information to the Engineer for review and approval at least one (1) week prior to commencement of construction activities. Submittal information generally includes product information, catalog pages, manufacturer's instruction, product warranties, specifications, samples, shop drawings, and proposed substitutions. At a minimum, the following items shall require submittal to the Engineer:

- Project Schedule – The Contractor shall submit an initial project schedule. This schedule, along with percentage of completion, shall be revised and submitted along with each application for payment.

- Major Components – Specifications for all major components such as Manholes and storm sewer pipe.

If a substitution is proposed, materials or equipment of other supplies may be accepted by the Engineer if sufficient information is submitted by the Contractor to allow the Engineer to determine that the material or equipment proposed is equivalent or equal to that named. However, the burden of proof as to the type, function, and quality of any such substitute material or equipment shall reside with the Contractor.

PUBLIC CONSTRUCTION ACT, 30 ILCS 557/1

Public Construction Act 30 ILCS 557/1 shall be applicable to this contract.

WAGE RATES

This contract calls for the construction of a "public work," within the meaning of the Illinois Prevailing Wage Act, 820 ILCS 130/.01 *et seq*. ("the Act"). The Act requires contractors and subcontractors to pay laborers, workers and mechanics performing services on public works projects no less than the "prevailing rate of wages" (hourly cash wages plus fringe benefits) in the county where the work is performed. For information regarding current prevailing wage rates, please refer to the Illinois Department of Labor's website at: https://labor.illinois.gov/laws-rules/conmed/current-prevailing-rates.html. All contractors and subcontractors rendering services under this contract must comply with all requirements of the Act, *including but not limited to*, all wage, notice and record keeping duties.

PREFERENCE TO VETERANS

Attention is called to assure compliance with Illinois Revised State Chapter 126 Section 23. Preference to veterans upon public works: "In the employment and appointment to fill positions in the construction, addition to, or alteration of all public works undertaken or contracted for by the state, or by any political subdivision thereof, preference shall be given to persons who were engaged in the military or naval service of the United States in time of war.

GUARANTEE

All materials and equipment shall be guaranteed for a period of one (1) year from the date of acceptance by the City. Upon receipt of notice from the City of failure of any part of the system during the guarantee period, new replacement parts shall be furnished and installed by the Contractor at no additional cost to the City of LaSalle. Restoration repairs, due to trench settlement, shall be guaranteed by the contractor for three (3) years from the date of acceptance by the City.

INSURANCE COVERAGE

In accordance with Section 107 "Legal Regulations and Responsibility to the Public", IDOT Standard Specifications for Road and Bridge Construction, adopted January 1, 2022, the contractor must obtain a Certificate of Insurance for "General Public Liability and Property Damage Insurance" naming the City of La Salle as additional insured. This certificate is to be issued to the Engineer for approval prior to the start of construction (or within 10 days after execution of the contract). This certificate is in addition to any company policies the contractor may have.

TRAFFIC CONTROL

Traffic Control shall be in accordance with the applicable sections of the Standard Specifications for Road and Bridge Construction, the Supplemental Specifications, the applicable guidelines contained in the Illinois Manual on Uniform Traffic Control Devices for Streets and Highways, any special details and Highway Standards contained herein and in the plans, the Traffic Specifications and the Special Provisions contained herein.

Special attention is called to Articles 107.09 and 107.14 of the Standard Specifications for Road and Bridge Construction and the following Highway Standards relating to traffic control:

701001 701006 701301 701901 BLR 22-7

The Contractor shall obtain, erect, maintain and remove all signs, barricades, flagmen and other traffic control devices as may be necessary for the purpose of regulating, warning or guiding traffic. Placement and maintenance of all traffic control devices shall be in accordance with the applicable parts of Article 107.14 of the Standard Specifications and the Illinois Manual on Uniform Traffic Control Devices for Streets and Highways and the attached special provisions.

If the contract does not include a pay item for Traffic Control and Protection, it will be considered incidental to the contract.

STORM WATER POLLUTION PREVENTION PLAN

During the course of the construction, the Contractor must comply with the National Pollution Discharge Elimination System Storm Water Rules and Regulations. Contactor must comply with these regulations and any other rules set forth by the USEPA and IEPA including required inspections, maintenances and reporting. This work will not be paid for separately but shall be considered incidental to the contract.

DUST CONTROL

The contractor shall be responsible for controlling the dust and air-borne dirt generated by his/her construction activities.

The implementation of dust control procedures shall be required if wind and dry soil conditions reduce visibility on adjacent roads and property. Concerns for health and safety to the public using adjacent facilities will be grounds for the implementation of a dust control plan. When circumstances warrant, a specific dust control plan shall be developed. The contractor and the engineer shall review the nature and extent of dust generating activities and cooperatively develop specific types of control techniques appropriated to that specific situation. Sample techniques that may warrant consideration include such measures as:

1. Minimize track out of soil onto nearby publicly traveled roads.
2. Reduce vehicle speed on unpaved surfaces.
3. Cover haul vehicles.
4. Apply chemical dust suppressants or water to exposed surfaces, particularly to surfaces on which construction vehicles travel.

Dust control measures as indicated in the Dust Control Plan, or as directed by the engineer shall be readily available for use on the project site. The cost of this work shall be included in the unit prices bid and no additional compensation will be allowed.

AS-BUILT DRAWINGS

The contractor will be responsible for providing one copy of red-lined drawings showing field lengths, rim and invert elevations and locations for all appurtenances installed as part of this contract. Distances should be given to each utility item from existing visible landmarks (surface) identified on the design plans for this project. This work shall not be paid for separately, but shall be incidental to the contract.

SAW CUT JOINTS

The removal and/or replacement of any driveways, pavement, curb, sidewalk, etc. shall be accomplished by means of a saw cut joint, at the direction of the Engineer. This work will not be paid for separately, but shall be included in the unit price bid for the various items.

MATERIALS

All materials used in construction will be certified as to type and quantity by ticket, invoice or other written means from the source of supply, and a copy of such supplied to the Engineer upon delivery of the material. All materials to be used shall be submitted for approval to the engineer prior to beginning of construction. No work shall begin until approval for materials is obtained from the engineer.

STORAGE OF MATERIAL AND EQUIPMENT

At no time shall the Contractor store material and equipment in areas other than specified by the Engineer. Any damage to sidewalks, curbs and parkways not scheduled for replacement under this contract, due to the negligence of the Contractor, shall be restored by the Contractor at his own expense.

The Contractor shall maintain, during the entire construction period, barricades and warning lights at all material storage areas and around construction equipment if located near traffic areas.

EXISTING UTILITIES

The Contractor shall call JULIE at telephone number (800) 892-0123 for location of underground public utilities prior to beginning of construction so that buried services in the locations of the construction may be located and staked out. Where adjustments of the utility frames or removal of utilities are necessary, the Contractor shall contact the respective utility company and make arrangements for their adjustment or removal.

The Engineer has attempted to indicate the presence of various public utilities along the construction route. These locations are from information supplied by the utility companies, and the Engineer, in no way, warrants their accuracy or completeness. It remains the contractor's responsibility to contact the utility companies in order to obtain the definite locations.

The Contractor shall also notify the City of LaSalle, Water Department, prior to the start of construction at any location. Any damage by the Contractor to the water and sewer services shall be repaired or replaced by the Contractor at his expense. Contractor shall avoid operating heavy equipment and/or trucks directly over water valves and shutoffs.

The Contractor shall make his own investigation to determine the existence, nature, and location of all utility lines and appurtenances within the limits of the improvement.

The Contractor shall be held responsible for any damage to existing utility lines and appurtenances resulting from the operations of his equipment or workers. The Contractor shall, at his own expense, restore the damaged utility line or appurtenances to a condition equal to that existing before such damage was done by repairing, rebuilding, or replacing it as directed by the Engineer in accordance with the applicable provisions of Section 107.31 of the Standard Specifications. No extra compensation will be allowed to the Contractor for any expense incurred because of delays, inconveniences, or interruptions to his work resulting from compliance with the above requirements.

STATE SPECIFICATIONS

The "Standard Specifications for Road and Bridge Construction", prepared by the Department of Transportation of the State of Illinois, and adopted on January 1, 2022 are a part of the specifications for this project and are referred to as "State Specifications". However, in case of conflict, the "Special Provisions shall take precedence and shall govern.

WORK HOURS

The following work hours shall be kept unless written permission is received from the City of La Salle. The Contractor may prosecute work between the hours of 7:00 a.m. and dusk each workday. However, no work will be permitted between dusk and 7:00 a.m., on Sundays, or on holidays, without prior written permission of the City of La Salle.

PAYMENTS TO CONTRACTOR

Payments shall be made monthly. Pay requests need to be submitted to the City Engineer four (4) days prior to a City Council meeting, which are posted on the City’s website. Contractor shall submit Partial Lien Waivers for all sub-contractors and suppliers for each pay request and Final Lien Waivers for final Pay Request.

RE-STOCKING FEES & LEFTOVER MATERIALS

Any leftover materials not used in the Work, at the completion of the project, shall be removed from the site by the Contractor at no additional cost to the City of La Salle.

The Contractor shall be responsible for the payment of any re-stocking fee associated with the return of an item.

In no case shall the City of La Salle be responsible to reimburse the Contractor for re-stocking fee or excess materials that cannot be returned to the supplier.

VIDEO RECORDING CONSTRUCTION SITE

Prior to the start of any construction, the contractor shall video record the area of the construction route. The video recording shall be supplied on a DVD-ROM Disc or thumb drive, for playback in a standard DVD player and/or computer and viewing on a television or computer. The contractor shall supply the engineer with two copies of the DVD/thumb drive prior to starting construction.

The contractor shall also narrate the video recording with reference to the location (station) the video recording is being produced from. The video recordings shall also supply a continuous audio record of the location, all anticipated problem areas, items, and features for the complete area to be affected by the construction.

The format of recording and type of recording used shall remain the same throughout the project. The video recording shall produce a clear, stable image with a resolution of not less than 1080p. When the recorded information is replayed and reviewed, it shall be free of electrical interference.

The audio portion of the composite signal shall be sufficiently free of electrical interference, background noise, and heavy foreign or regional accents to provide an oral report that is clear and complete and easily discernible. The audio portion of the video recording report shall be recorded by the operating technician as they are being produced and shall include references to the street address and type of construction to be performed at the site as specified in the plans. Audio comments pertaining to special circumstances, which may arise during the excavation, shall also be included. Dubbing the audio information onto the video tract after the video recording is completed will not be permitted.

The cost of video recording and log preparation shall not be compensated for separately but shall be considered incidental to the contract.

PUBLIC AND RESIDENT NOTIFICATION

If the Contractor is required to shutoff existing utility service (i.e., water, sanitary, power, communications, and gas) for any reason during the course of this project, the Contractor shall provide 24 hour advance written notice to: 1) the City of La Salle of the scheduled work, 2) those residents with connections to the utility sections affected by the work, and 3) any other residents that may potentially be adversely affected by the construction operations. The notification shall be of a form and method as approved by the City of La Salle.

GUARANTEE

All materials and equipment shall be guaranteed for a period of one (1) year from the date of acceptance by the Owner. Upon receipt of notice from the Owner of failure of any part of the system during the guarantee period, new replacement parts shall be furnished and installed by the Contractor at no additional cost to the City of La Salle.

TREE PRESERVATION

The contractor shall note the existing trees and bushes to remain within the project area. Any potential conflicts with existing vegetation shall be brought to the engineer's attention for resolution. The contractor shall be responsible for protecting trees and bushes and to minimize the potential for damage to these. Trees or bushes determined by the City of La Salle to be sufficiently damaged by the contractor's work shall be replaced to the satisfaction of the City of La Salle without any additional compensation. Species and sizes of replacement trees and/or bushes shall be as similar as possible to those damaged by the work.

The cost of compliance with this requirement shall not be compensated for separately but shall be considered incidental to the contract.

STREET SIGN REMOVAL AND REINSTALLATION

Before construction begins, Contractor shall remove and store in a dry secure location, all street signs or other signs designated by the Engineer to be removed. Mailboxes that interfere with storm and/or sanitary sewer installation shall be relocated during construction and relocated as soon as restoration in the construction area has begun. After completion of improvement, Contractor will reinstall street signs or other signs at locations designated by the

Engineer. Contractor shall be responsible for any damage caused to signs or mailboxes and shall repair or replace at his expense. If sign replacement is required, contractor shall follow IDOT Highway standard drawings included.

Payment for removal and reinstallation of signs and mailboxes shall be incidental to storm and/or sanitary sewer construction.

WATER USE

The Contractor desiring to use water from municipal hydrants will be required to contact the City of LaSalle, and if the request is granted, he shall conform with the ordinances and/or requirements of the City, as well as with the rules and regulations of the Water Department, and will be held responsible for all damages to hydrants and water pipe used for the purposes of securing water.

When additional water from fire hydrants is necessary to avoid delay in normal work procedures, the water shall be conserved and not used unnecessarily. No fire hydrant shall be obstructed in case of a fire in the area served by the hydrant.

EXCESS MATERIAL

Excess material from the improvements and all other materials shall be disposed of properly by the Contractor and is considered to be incidental to the Contract.

RELOCATE TREE, 4”

Prior to the start of construction, the contractor shall excavate the plant hole then carefully dig, avoiding injury to the tree or loss or damage of the roots, the existing tree(s) identified for relocation. This item is to establish a unit price in the event it is necessary to relocate a recently planted tree.

Work shall be in accordance with Section 253 of the Standard Specifications and shall be paid for at the contract unit price per EACH for RELOCATE TREE, 4”

TRENCH BACKFILL

All materials used for trench backfill under and within two feet (2') of paved areas, including streets, curbs, sidewalks and driveways shall meet the requirements of Article 1003.04 of the Standard Specifications.

All trench widths shall be kept to a minimum during construction operations. The Contractor shall take great care while jetting and tamping during backfilling operations to ensure proper compaction of materials, including areas under unpaved surfaces. All trenches shall be backfilled to the proper subgrade elevation in accordance with Section 208 of the Standard Specifications.

If trench settlement occurs, the Contractor shall, at his own expense, perform all additional work, including further jetting, tamping and/or placement of additional aggregate, necessary to ensure both proper compaction of the trench and proper safety for motorists and pedestrians. Should trench settlement occur after surface restoration, the Contractor shall, at his own expense, remove and replace the newly constructed pavement, driveway, curb and/or sidewalk (by straight saw cut joint) and perform all work required to properly compact the trench and prevent further settling. Restoration of the construction limits and additional hydroseeding shall also be performed.

Paved areas to be disturbed during the construction of storm sewers, sanitary sewers, structures, and other incidental construction are clearly indicated in the plans.

The cost for furnishing, transporting, placing and compacting the trench backfill materials required as a part of this project will be paid for at the contract unit price per CUBIC YARD of TRENCH BACKFILL. No additional consideration will be given to over-excavation resulting from the use of trench boxes

REMOVE, STOCKPILE AND PLACE TOPSOIL

Prior placement of trench spoils material, the topsoil to a depth of 6” shall be removed and stockpiled on-site.

Upon completion of the project, the contractor shall place the stockpiled topsoil. Care shall be taken to eliminate ponding areas.

The cost of this work, including all equipment, labor and materials required for excavation, grading and compaction, will be paid for at the contract unit price per CY of REMOVE, STOCKPILE AND PLACE TOPSOIL. Seeding will be paid for separately.

SEEDING, CLASS 1 (SPECIAL)

This work shall consist of preparing the ground surface, fertilizing the areas to be seeded and furnishing and placing seed and mulch. Mulch, Method 2, procedure 1 or 2 shall be used and shall not be paid for separately. The locations to be seeded shall be those areas disturbed by construction and as shown on the plans. All work shall be in accordance with the applicable portions of Section 211, 250 and 251 of the Standard Specifications. The typical pay width shall be as detailed in the plans or as directed by the Engineer.

Prior to seeding, the Contractor shall first spread and blend in fertilizer in accordance with Section 250 of the Standard Specifications. The fertilizer shall be applied at the rate of 270 pounds per acre and at a 1:1:1 ratio as follows:

1.	Nitrogen Fertilizer Nutrient	90 lbs/acre
2.	Phosphorus Fertilizer Nutrient	90 lbs/acre
3.	Potassium Fertilizer Nutrient	90 lbs/acre

Restoration limits for seeding shall be as indicated on the plans or directed by the Engineer. If, in the opinion of the Engineer, more surface area than necessary has been damaged, it shall be replaced by the Contractor as specified herein without additional compensation.

Watering shall be as specified in the Standard Specifications and shall be the contractor's responsibility to guarantee the growth of the seed regardless of the number of waterings required.

No additional compensation shall be paid for furnishing and applying the fertilizer but rather this work will be considered incidental to the restoration. Watering shall be in accordance with Article 252.09 of the Standard Specifications and considered incidental to the seeding. The Contractor will be responsible for watering the area sufficiently for conditions. This work shall be measured in place and shall be paid for at the contract unit price per Acre for SEEDING, CLASS 1 (SPECIAL), which price shall be full compensation for all labor, equipment, and material to complete the work as specified in these special provisions.

PERIMETER EROSION BARRIER

This work shall consist of constructing silt filter fence at locations shown in the contract drawings and/or as directed by the Engineer for the purposes of preventing erosion of construction site materials into drainage ways. All work shall be performed in accordance with the applicable articles of Section 280 of the Standard Specifications, and in accordance with the detail drawings and notes on the erosion control plans. Silt Fence shall be installed as directed by the resident engineer.

The Contractor shall be responsible for monitoring the condition of all silt fences as the construction proceeds, and shall maintain them in proper working order for the duration of the project. All silt fences shall be removed and properly disposed of, and excavated areas restored to their original condition, after the excavation and backfill operations are completed.

Measurement for payment for silt fence shall be along the centerline of fence installed. The cost for all work required, including excavation of post holes, fence posts, geotextile fabric, fabric anchorage materials, and fence maintenance and removal shall be included in the contract unit price bid per FOOT for PERIMETER EROSION BARRIER.

AGGREGATE SURFACE, 6”

This work shall consist of the removal and replacement of existing aggregate driveway and/or pavement due to the installation of the storm sewer or structures. This work shall be performed in accordance with applicable portions of Section 351 of the Standard Specifications.

The existing driveway/pavement shall be removed and replaced with aggregate CA6, Type B, and recompacting the material by means of mechanical tamper meeting the approval of the Engineer. The depth of new aggregate shall be a minimum of six (6) inches.

Aggregate Driveway/Pavement replacement will be paid for at the contract unit price bid per SQUARE YARD for AGGREGATE SURFACE, 6”, which price shall be payment in full for all labor, material, and equipment necessary for the removal and disposal of the existing base, and the replacement with suitable aggregate material as specified herein.

HOT-MIX ASPHALT SURFACE COURSE, MIX “C”, N50

This item shall be constructed in accordance with the applicable portions of Section 406 of the Standard Specifications. AC type shall be PG 64-22 with 4% air voids at 50 GYR. The thickness of HMA Surface Course shall be 2”. The cost for Anti-Stripping additives will not be paid for separately, but shall be included in the per TON unit price. Final HMA surface shall be placed after trench had been allowed to settle.

Bituminous Materials (Tack Coat) shall be applied at a rate of 0.05 Gal/SY prior to the placement of HMA Surface Course. This shall be incidental to the HMA Surface Course.

This work shall be paid for at the contract unit price per TON for HOT-MIX ASPHALT SURFACE COURSE, MIX “C”, N50.

HOT-MIX ASPHALT SURFACE REMOVAL, 2”

The bituminous surface removal shall be accomplished by using a cold milling machine or similar method approved by the Engineer. This work shall be done in accordance with Section 440 of the Standard Specifications. The City of La Salle reserves the right of ownership of the milled grindings. The contractor is responsible for hauling any and all grindings to designated City stockpiles. All grindings not taken by the City of La Salle shall be disposed of by the contractor. No extra compensation will be given for hauling of milled grindings.

This work will be paid for at the contract unit price per SQUARE YARD of HOT-MIX ASPHALT SURFACE REMOVAL, 2”.

PAVEMENT REPLACEMENT, 3”

Where existing pavement is to be milled and overlaid and is to be removed due to the installation of storm sewer, it shall be removed to a straight sawed joint and restored with nine inches (9") of Aggregate Base Course Type B, an application of Bituminous Materials (Prime Coat) at a rate of 0.30 gallons per square yard, three inches (3") of Hot-Mix Asphalt Binder IL-19mm, matching the milled surface. The replacement pay width shall be no greater than that allowed the typical maximum storm sewer trench widths (i.e. 18" to 36" greater than the outside diameter of the pipe), plus 1 foot either side or as directed by the Engineer. Aggregate base course will only be required to be replaced above the sewer trench area only and not the 1' additional width outside the trench, assuming no contamination occurs during excavation operations.

Pavement replacement shall be measured in place and the areas computed in square yards. The area measured shall be the actual areas required as ordered by the Engineer. If additional pavement is removed or damaged due to the negligence on the part of the Contractor, the additional quantities shall not be measured for payment, but shall be done at the Contractor's expense.

Pavement replacement will be paid for at the contract unit price per SQUARE YARD for PAVEMENT REPLACEMENT, 3”, which price will be payment in full for all labor, materials and equipment necessary for the

aggregate base course, bituminous material (prime coat), hot-mix asphalt surface course replacement, and disposing of the unsuitable material, all as directed by the Engineer and as specified herein.

COMBINATION CONCRETE CURB AND GUTTER, REMOVE AND REPLACE (SPECIAL)

This item shall consist of the removal and replacement of combination concrete curb and gutter, in accordance with Sections 440 and 606 of the Standard Specifications, and the detail of the proposed curb and gutter by means of a sawed joint (straight) at locations as designated by the Engineer. The replaced curb and gutter shall be similar to the type and size as the removed section.

All curb and gutter shall have sawcut contraction joints two (2") inches deep at 15' intervals. This sawcutting shall be done no later than 24 hours after the curb has been poured. Expansion and construction joints shall be as directed by the Standard Specifications and Standard Drawings. One inch (1") preformed joint filler shall be placed at the ends of all replaced sections.

All material required, including expansion material, and any labor and incidentals for a complete job shall be paid for at the contract unit price bid per FOOT of COMBINATION CONCRETE CURB AND GUTTER, REMOVE AND REPLACE (SPECIAL).

SDR-26 (PS-115), PVC STORM SEWER (SIZE AS INDICATED ON THE PLANS), WATER QUALITY

The Contractor shall install new polyvinyl chloride (PVC) storm sewer, Type SDR 26 (PS-115) meeting the requirements of ASTM D-3034 for 6" to 15" and ASTM F-679 for 18" to 30". Joints shall be ASTM D-3212 (gasket). Special care shall be used to minimize the trench width and damage to pavement, trees, sidewalk, sod, driveways and signs. The Contractor shall make all possible effort to minimize the trench width. Any additional equipment needed to maintain the trench width shall be considered incidental. Removal and replacement of existing street signs, if necessary, shall be considered incidental to the cost of the storm sewer. The connection to manholes shall be made with a manhole adapter recommended and approved by the pipe manufacturer.

Each PVC pipe length and fitting shall be clearly marked with the following:

a. Manufacturer's Name
b. Nominal Pipe Size
c. Cell Classification
d. ASTM Designation
e. Pipe Stiffness - 115 psi

All pipe shall be factory air tested with gasket in place and marked accordingly.

PVC pipe joints shall be the bell and spigot type. Gaskets shall meet the requirements of ASTM F 477 and be molded into a circular form or extruded to the proper section, then spliced into circular form, and shall be made of a properly cured high grade elastomeric compound. Gaskets shall be factory installed and chemically bonded to the bell end of the pipe. Field installed gaskets and field cut beveled lengths of pipe shall be done in accordance with the manufacturer's instructions and recommended equipment and materials. All pipe gaskets and spigots shall be thoroughly cleaned and lubricated prior to assembly. Water tight gaskets shall be used at locations where the existing water main and proposed storm sewer do not meet the horizontal or vertical separation requirements as detailed in the "Standard Specifications for Water and Sewer Main Construction in Illinois", latest edition.

Connections to existing manholes shall be made by inserting a length of PVC pipe into the hole, filling around the pipe with non-shrink grout and troweling the inside and outside surfaces of the joint to a neat finish. A manhole adaptor or water stop shall be placed on the smooth wall pipe prior to placement in the hole. New manhole connections to precast concrete bases can be made with elastomeric gasket seals such as ALOK or KOR'N SEAL. Connections to poured in-place manholes shall use manhole adaptors or waterstops.

Bedding shall consist of gravel, crushed gravel, or crushed stone 1/4" to 1" in size. As a minimum, the material shall conform to the requirements of Article 1004.01 of the "Standard Specifications for Road and Bridge

Construction," of the State of Illinois. The gradation shall conform to gradation CA 11 or CA 13 of the Illinois Standard Specifications or to ASTM Gradation 67. The pipe shall be laid so that it will be uniformly supported and the entire length of the pipe barrel will have full bearing. No blocking of any kind shall be used to adjust the pipe to grade except when used with embedment concrete. The backfill material to a level twelve inches (12") over the top of the pipe shall be of the same material as the bedding material specified above and shall be carefully placed so as to completely fill the space under and around the pipe, in eight in layers, loose measurement, and compacted to the satisfaction of the Engineer. Bedding shall be a minimum of 4 inches.

Where the grade of the proposed storm sewer differs from the existing, and there will be a gap between the previous bottom of trench grade and the proposed grade, this gap shall be filled with bedding material and considered incidental to the cost of this item.

Where unsuitable material is encountered at the grade established, all such unsuitable soil shall be removed under the pipe and for the width of the trench, and shall be replaced with well compacted bedding material, to the satisfaction of the Engineer.

This work shall be paid for at the unit price bid per FOOT of SDR-26 (PS-115), PVC STORM SEWER (SIZE AS INDICATED ON THE PLANS), WATER QUALITY which price shall include the installation of the replacement sewer, removal and disposal of the existing storm sewer and all work as mentioned above.

STORM SEWERS, HIGH DENSITY POLYETHYLENE PIPE, 24” & 30”

This work shall be performed in accordance with the manufacturer’s recommendations, these special provisions, and the details shown in the plans.

Storm sewer shall consist of furnishing and installing 24” & 30” High Density Polyethylene Pipe, conforming to the requirements of AASHTO M-294 in the location and at the depth as shown on the plans. All pipes shall be smooth interior pipe and shall be installed as detailed in the plans.

The Polyethylene Storm Sewer shall be installed using a Class II backfill material from 6" below the pipe to 6" above the pipe.

This items shall be paid for at the contract unit price per FOOT of STORM SEWERS, HIGH DENSITY POLYETHYLENE PIPE, 24” & 30”.

CONNECT PROPOSED PIPE TO EXISTING STRUCTURE (SIZE SPECIFIED)

This work includes the connection of the proposed storm sewers to the existing structures at locations shown on the plans. The proposed connection shall be neatly cut and the area between the cut out and sewer filled with brick and mortar in accordance with Section 1042.

This will be paid for at the contract unit price per EACH for CONNECT PROPOSED PIPE TO EXISTING STRUCTURE of the size indicated on the plans, which includes all work specified herein.

INLET SPECIAL NO. 4

This item of work shall consist of construction of inlets according to Section 602 of the Standard Specifications, the plans, as directed by the Engineer, and as herein described. At the locations shown on the plans, the contractor shall construct special inlets. The inside dimension of this structure shall be 4’ X 6’. The inlet lid as well as the ring and cover used shall be according to the details as shown in the plans. All Inlets, Special shall have manhole steps according to Standard 602701, Manhole Steps. These manhole steps shall be placed according to the Inlets, Special, No.4 included in these documents.

The Contractor shall construct a concrete throat area in front of each inlet at locations and according to the details shown on the plans. The Contractor shall insert a #8 epoxy coated deformed reinforcement bar horizontally

across the center of the inlet opening. The costs of construction of the concrete throat area and the reinforcement bar shall be considered included in the cost of constructing the inlet.

This will be paid for at the contract unit price per EACH for INLET SPECIAL NO. 4.

REMOVE STRUCTURE

This work shall consist of the removal of existing manholes/inlets where indicated on the plan or directed by the Engineer.

Any existing pavement requiring removal shall be boxed out and saw cut around the structure to allow clean removal. Existing pipes shall be saw cut a sufficient distance away from the existing structure to allow removal of the structure. Removed or extended pipes shall be replaced with new pipe of the same size and type and connected to the proposed structure. Connections to existing pipes shall be made using a band seal, concrete collar or other approved method.

The cost for removal of manholes/inlets where designated by the Engineer and for all required work and materials described herein will be paid for at the contract unit price per EACH for REMOVE structure.

REMOVE FLARED END SECTION

This work shall consist of the removal of existing flared end sections where indicated on the plan or directed by the Engineer.

Existing pipes shall be saw cut a sufficient distance away from the existing structure to allow removal of the structure.

The cost for removal of flared end sections where designated by the Engineer and for all required work and materials described herein will be paid for at the contract unit price per EACH for REMOVE FLARED END SECTION.

STORM SEWER REMOVAL

This work shall consist of the removal of existing storm sewer as shown on the plans. The existing sewer may be salvaged by the contractor for whatever use he sees fit. Trenches falling under or within 2' of proposed pavement or driveways shall be backfilled in accordance with section 208. The cost for the removal, backfilling and disposal of the materials will not be paid for separately but included in the unit price for storm sewer installation.

PLUG (SIZE SPECIFIED)

This work shall consist of the plugging of sanitary and storm sewers shown on the plan with brick and mortar in accordance with Section 550.05 of the Standard Specifications.

This will be paid for at the contract unit price per EACH for PLUG (SIZE SPECIFIED) which includes all work specified herein.

CLEAN CONSTRUCTION/DEMOLITION DEBRIS (CCDD) REQUIREMENTS PER PA 96-1416

To comply with Public Act 96-1416, the Contractor shall be responsible for all IEPA documentation and testing required to haul and dispose of Clean Construction or Demolition Debris. The cost associated with any engineering or material testing shall be incidental to the appropriate contract pay items.

ABV	ABOVE
A/C	ACCESS CONTROL
AC	ACRE
ADJ	ADJUST
AS	AERIAL SURVEYS
AGG	AGGREGATE
AH	AHEAD
APT	APARTMENT
ASPH	ASPHALT
AUX	AUXILIARY
AGS	AUXILIARY GAS VALVE (SERVICE)
AVE	AVENUE
AX	AXIS OF ROTATION
BK	BACK
B-B	BACK TO BACK
BKPL	BACKPLATE
B	BARN
BARR	BARRICADE
BL	BASELINE
BGN	BEGIN
BM	BENCHMARK
BIND	BINDER
BIT	BITUMINOUS
BTM	BOTTOM
BLVD	BOULEVARD
BRK	BRICK
BBOX	BUFFALO BOX
BLDG	BUILDING
CATV	CABLE
CIP	CAST IRON PIPE
CB	CATCH BASIN
C-C	CENTER TO CENTER
CL	CENTERLINE OR CLEARANCE
CL-E	CENTERLINE TO EDGE
CL-F	CENTERLINE TO FACE
CTS	CENTERS
CERT	CERTIFIED
CHSLD	CHISELED
CS	CITY STREET
CP	CLAY PIPE
CLSD	CLOSED
CLID	CLOSED LID
CT	COAT OR COURT
COMB	COMBINATION
C	COMMERCIAL BUILDING
CE	COMMERCIAL ENTRANCE
CONC	CONCRETE
CONST	CONSTRUCT
CONTD	CONTINUED
CONT	CONTINUOUS
COR	CORNER
CORR	CORRUGATED
CMP	CORRUGATED METAL PIPE
CNTY	COUNTY
CH	COUNTY HIGHWAY
CSE	COURSE
XSECT	CROSS SECTION
m^3	CUBIC METER
mm^3	CUBIC MILLIMETER
CU YD	CUBIC YARD
CULV	CULVERT
C&G	CURB & GUTTER
D	DEGREE OF CURVE
DC	DEPRESSED CURVE
DET	DETECTOR
DIA	DIAMETER
DIST	DISTRICT
DOM	DOMESTIC
DBL	DOUBLE
DSEL	DOWNSTREAM ELEVATION
DSFL	DOWNSTREAM FLOWLINE
DR	DRAINAGE OR DRIVE
DI	DRAINAGE INLET OR DROP INLET
DRV	DRIVEWAY
DCT	DUCT
EA	EACH
EB	EASTBOUND
EOP	EDGE OF PAVEMENT
E-CL	EDGE TO CENTERLINE
E-E	EDGE TO EDGE
ELEC	ELECRICAL
EL	ELEVATION
ENTR	ENTRANCE
EXC	EXCAVATION
EX	EXISTING
EXPWAY	EXPRESSWAY
E	EXTERNAL DISTANCE OF HORIZONTAL CURVE
E	OFFSET DISTANCE TO VERTICAL CURVE
F-F	FACE TO FACE
FA	FEDERAL AID
FAI	FEDERAL AID INTERSTATE
FAP	FEDERAL AID PRIMARY
FAS	FEDERAL AID SECONDARY
FAUS	FEDERAL AID URBAN SECONDARY
FP	FENCE POST
OPT	FIBER OPTIC
FE	FIELD ENTRANCE
FH	FIRE HYDRANT
FL	FLOW LINE
FB	FOOT BRIDGE
FDN	FOUNDATION
FR	FRAME
F&G	FRAME & GRATE
FRWAY	FREEWAY
GAL	GALLON
GALV	GALVANIZED
G	GARAGE
GM	GAS METER
GV	GAS VALVE
GIS	GEOGRAPHICAL INFORMATION SYSTEM
GRAN	GRANULAR
GR	GRATE
GRVL	GRAVEL
GND	GROUND
GUT	GUTTER
GP	GUY POLE
GW	GUY WIRE
HH	HANDHOLE
HATCH	HATCHING
HD	HEAD
HDW	HEADWALL
HDUTY	HEAVY DUTY
ha	HECTARE
HMA	HOT MIX ASPHALT
HWY	HIGHWAY
HORIZ	HORIZONTAL
HSE	HOUSE
IL	ILLINOIS
IMP	IMPROVEMENT
IN DIA	INCH DIAMETER
INL	INLET
INST	INSTALLATION
IDS	INTERSECTION DESIGN STUDY
INV	INVERT
IP	IRON PIPE
IR	IRON ROD
JT	JOINT
kg	KILOGRAM
km	KILOMETER
LS	LANDSCAPING
LN	LANE
LT	LEFT
LIDAR	LIGHT DETECTION AND RANGING
LP	LIGHT POLE
LGT	LIGHTING
LF	LINEAL FEET OR LINEAR FEET
L	LITER OR CURVE LENGTH
LC	LONG CHORD
LNG	LONGITUDINAL
L SUM	LUMP SUM
MACH	MACHINE
MB	MAIL BOX
MH	MANHOLE
MATL	MATERIAL
MED	MEDIAN
m	METER
METH	METHOD
M	MID-ORDINATE
mm	MILLIMETER
mm DIA	MILLIMETER DIAMETER
MIX	MIXTURE
MBH	MOBILE HOME
MOD	MODIFIED
MFT	MOTOR FUEL TAX
N & BC	NAIL & BOTTLE CAP
N & C	NAIL & CAP
N & W	NAIL & WASHER
NC	NORMAL CROWN
NB	NORTHBOUND
NE	NORTHEAST
NW	NORTHWEST
O/S	OFFSET
O&C	OIL AND CHIP
OLID	OPEN LID
PAT	PATTERN
PVD	PAVED
PVMT	PAVEMENT
PM	PAVEMENT MARKING
PED	PEDESTAL
PNT	POINT
PC	POINT OF CURVATURE
PI	POINT OF INTERSECTION OF HORIZONTAL CURVE
PRC	POINT OF REVERSE CURVE
PT	POINT OF TANGENCY
POT	POINT ON TANGENT
POLYETH	POLYETHYLENE
PCC	PORTLAND CEMENT CONCRETE
PP	POWER POLE OR PRINCIPAL POINT
PRM	PRIME
PE	PRIVATE ENTRANCE
PROF	PROFILE
PGL	PROFILE GRADELINE
PROJ	PROJECT
P.C.	PROPERTY CORNER
PL	PROPERTY LINE
PR	PROPOSED
R	RADIUS or RESIDENTUAL
RR	RAILROAD
RRS	RAILROAD SPIKE
RPS	REFERENCE POINT STAKE
REF	REFLECTIVE
RCCP	REINFORCED CONCRETE CULVERT PIPE
REINF	REINFORCEMENT
REM	REMOVAL
RC	REMOVE CROWN
REP	REPLACEMENT
REST	RESTAURANT
RESURF	RESURFACING
RET	RETAINING
RT	RIGHT
ROW	RIGHT-OF-WAY
RD	ROAD
RDWY	ROADWAY
RTE	ROUTE
SAN	SANITARY
SANS	SANITARY SEWER
SEC	SECTION
SEED	SEEDING
SHAP	SHAPING
S	SHED
SH	SHEET
SHLD	SHOULDER
SW	SIDEWALK OR SOUTHWEST
SIG	SIGNAL
SOD	SODDING
SM	SOLID MEDIAN
SB	SOUTHBOUND
SE	SOUTHEAST
SPL	SPECIAL
SD	SPECIAL DITCH
SQ FT	SQUARE FEET
m^2	SQUARE METER
mm^2	SQUARE MILLIMETER
SQ YD	SQUARE YARD
STB	STABILIZED
STD	STANDARD
SBI	STATE BOND ISSUE
SR	STATE ROUTE
STA	STATION
SPBGR	STEEL PLATE BEAM GUARDRAIL
SS	STORM SEWER
STY	STORY
ST	STREET
STR	STRUCTURE
e	SUPERELEVATION RATE
S.E. RUN.	SUPERELEVATION RUNOFF LENGTH
SURF	SURFACE
SMK	SURVEY MARKER
T	TANGENT DISTANCE
T.R.	TANGENT RUNOUT DISTANCE
TEL	TELEPHONE
TB	TELEPHONE BOX
TP	TELEPHONE POLE
TEMP	TEMPORARY
TBM	TEMPORARY BENCH MARK
TD	TILE DRAIN
TBE	TO BE EXTENDED
TBR	TO BE REMOVED
TBS	TO BE SAVED
TWP	TOWNSHIP
TR	TOWNSHIP ROAD
TS	TRAFFIC SIGNAL
TSCB	TRAFFIC SIGNAL CONTROL BOX
TSC	TRAFFIC SYSTEMS CENTER
TRVS	TRANSVERSE
TRVL	TRAVEL
TRN	TURN
TY	TYPE
T-A	TYPE A
TYP	TYPICAL
UNDGND	UNDERGROUND
USGS	U.S. GEOLOGICAL SURVEY
USEL	UPSTREAM ELEVATION
USFL	UPSTREAM FLOWLINE
UTIL	UTILITY
VBOX	VALVE BOX
VV	VALVE VAULT
VLT	VAULT
VEH	VEHICLE
VP	VENT PIPE
VERT	VERTICAL
VC	VERTICAL CURVE
VPC	VERTICAL POINT OF CURVATURE
VPI	VERTICAL POINT OF INTERSECTION
VPT	VERTICAL POINT OF TANGENCY
WM	WATER METER
WV	WATER VALVE
WMAIN	WATER MAIN
WB	WESTBOUND
WILDFL	WILDFLOWERS
W	WITH
WO	WITHOUT

Illinois Department of Transportation

PASSED January 1, 2021
ENGINEER OF POLICY AND PROCEDURES

APPROVED January 1, 2021
ENGINEER OF DESIGN AND ENVIRONMENT

ISSUED 1-1-07

DATE	REVISIONS
1-1-21	Updated fonts, abbreviations
	and symbols.
1-1-19	Added new symbols.

STANDARD SYMBOLS, ABBREVIATIONS AND PATTERNS

(Sheet 1 of 9)

STANDARD 000001-08

ADJUSTMENT ITEMS

	EX	PR
Structure To Be Adjusted		ADJ
Structure To Be Cleaned		C
Main Structure To Be Filled		FM
Structure To Be Filled		F
Structure To Be Filled Special		FSP
Structure To Be Removed		R
Structure To Be Reconstructed		REC
Structure To Be Reconstructed Special		RSP
Frame and Grate To Be Adjusted		A
Frame and Lid To Be Adjusted		A
Domestic Service Box To Be Adjusted		A
Valve Vault To Be Adjusted		A
Special Adjustment		SP
Item To Be Abandoned		AB
Item To Be Moved		M
Item To Be Relocated		REL
Pavement Removal and Replacement		

ALIGNMENT ITEMS

	EX	PR
Baseline		
Centerline		
Centerline Break Circle		
Baseline Symbol	BL	BL
Centerline Symbol		℄
PI Indicator		
Point Indicator		
Horizontal Curve Data (Half Size)	EX. CURVE P.I. STA= Δ= D= R= T= L= E= e= T.R.= S.E. RUN= P.C. STA= P.T. STA=	CURVE P.I. STA= Δ= D= R= T= L= E= e= T.R.= S.E. RUN= P.C. STA= P.T. STA=

BOUNDARIES ITEMS

	EX	PR
Dashed Property Line		
Solid Property/Lot Line		
Section/Grant Line		
Quarter Section Line		
Quarter/Quarter Section Line		
County/Township Line		
State Line		
Chiseled Square Found		
Iron Pipe Found		
Iron Pipe Set		
Survey Marker		
Property Line Symbol	PL	
Same Ownership Symbol (Half Size)		
Northwest Quarter Corner (Half Size)		
Section Corner (Half Size)		
Southeast Quarter Corner (Half Size)		

DRAINAGE ITEMS

	EX	PR
Channel or Stream Line		
Culvert Line		
Grading & Shaping Ditches		
Drainage Boundary Line		
Paved Ditch		
Aggregate Ditch		
Pipe Underdrain		
Storm Sewer		
Flowline	FL	FL
Ditch Check		
Headwall		
Inlet		
Manhole		
Summit		
Roadway Ditch Flow		
Swale		
Catch Basin		
Culvert End Section		
Water Surface Indicator		
Riprap		

HYDRAULICS ITEMS

	EX	PR
Overflow		
Sheet Flow		
Hydrant Outlet		

Illinois Department of Transportation

PASSED January 1, 2021
ENGINEER OF POLICY AND PROCEDURES

APPROVED January 1, 2021
ENGINEER OF DESIGN AND ENVIRONMENT

ISSUED 1-1-07

STANDARD SYMBOLS, ABBREVIATIONS AND PATTERNS

(Sheet 2 of 9)

STANDARD 000001-08

EROSION & SEDIMENT CONTROL ITEMS

	EX	PR
Cleaning & Grading Limits		
Dike		
Erosion Control Fence		
Perimeter Erosion Barrier		
Temporary Fence		
Ditch Check Temporary		
Ditch Check Permanent		
Inlet & Pipe Protection		
Sediment Basin		
Erosion Control Blanket		
Fabric Formed Concrete Revetment Mat		
Turf Reinforcement Mat		
Mulch Temporary		
Mulch Method 1		
Mulch Method 2 Stabilized		
Mulch Method 3 Hydraulic		

CONTOUR ITEMS

	EX	PR
Approx. Index Line		
Approx. Intermediate Line		
Index Contour		
Intermediate Contour		

Illinois Department of Transportation

PASSED January 1, 2021
ENGINEER OF POLICY AND PROCEDURES

APPROVED January 1, 2021
ENGINEER OF DESIGN AND ENVIRONMENT

ISSUED 1-1-07

NON-HIGHWAY IMPROVEMENT ITEMS

	EX	PR
Noise Attn./Levee		
Field Line		
Fence		
Base of Levee		
Mailbox		
Multiple Mailboxes		
Pay Telephone		
Advertising Sign		
ITS* Camera		
Wind Turbine		
Cellular Tower		

*Intelligent Transportation Systems

LANDSCAPING ITEMS

	EX	PR
Contour Mounding Line		
Fence		
Fence Post		
Shrubs		
Mowline		
Perennial Plants		
Seeding Class 2		
Seeding Class 2A		
Seeding Class 4		
Seeding Class 4 & 5 Combined		

EXISTING LANDSCAPING ITEMS (contd.)

	EX	PR
Seeding Class 5		
Seeding Class 7		
Seedlings Type 1		
Seedlings Type 2		
Sodding		
Mowstake w/Sign		
Tree Trunk Protection		
Evergreen Tree	E	
Shade Tree	E	

LIGHTING

	EX	PR
Duct		
Conduit		
Electrical Aerial Cable	A	A
Electrical Buried Cable	L	L
Controller		
Underpass Luminaire		
Power Pole		

STANDARD SYMBOLS, ABBREVIATIONS AND PATTERNS

(Sheet 3 of 9)

STANDARD 000001-08

LIGHTING (contd.)

	EX	PR
Pull Point	Ⓟ	Ⓟ
Handhole		
Heavy Duty Handhole		
Junction Box		
Light Unit Comb.		
Electrical Ground		
Traffic Flow Arrow		
High Mast Pole (Half Size)		
Light Unit-1		

PAVEMENT (MISC.)

	EX	PR
Keyed Long. Joint		
Keyed Long. Joint w/Tie Bars		
Sawed Long. Joint w/Tie Bars		
Bituminous Shoulder		
Bituminous Taper		
Stabilized Driveway		
Widening		

PAVEMENT MARKINGS

	EX	PR
Handicap Symbol		
RR Crossing		
Raised Marker Amber 1 Way		
Raised Marker Amber 2 Way		
Raised Marker Crystal 1 Way		
Two Way Turn Left		
Shoulder Diag. Pattern		
Skip-Dash White		
Skip-Dash Yellow		
Stop Line		
Solid Line		
Double Centerline		
Dotted Lines		

Illinois Department of Transportation

PASSED January 1, 2021
ENGINEER OF POLICY AND PROCEDURES

APPROVED January 1, 2021
ENGINEER OF DESIGN AND ENVIRONMENT

ISSUED 1-1-07

STANDARD SYMBOLS, ABBREVIATIONS AND PATTERNS

(Sheet 4 of 9)

STANDARD 000001-08

PAVEMENT MARKINGS (contd.)

	EX	PR
CL 2Ln 2Way RRPM 12.2 m (40') o.c.		
CL 2Ln 2Way RRPM 80' (24.4 m) o.c.		
CL Multilane Div. RRPM 40' (12.2 m) o.c.		
CL Multilane Div. RRPM 80' (24.4 m) o.c.		
CL Multilane Div. Dbl. RRPM 80' (24.4 m) o.c.		
CL Multilane Undiv.		
Two Way Turn Left Line		
Urban Combination Left		
Urban Combination Right		
Urban Left Turn Arrow		
Urban Right Turn Arrow		
Urban Left Turn Only		
Urban Right Turn Only		
Urban Thru Only		
Urban LT & RT Turn Arrow		
Urban Thru Arrow		

RAILROAD ITEMS

	EX	PR
Abandoned Railroad		
Railroad		
Railroad Point		
Control Box		
Crossing Gate		
Flashing Signal		
Railroad Cant. Mast Arm		
Crossbuck		

REMOVAL ITEMS

	EX	PR
Removal Tlc		
Bituminous Removal		
Hatch Pattern		
Tree Removal Single		

RIGHT OF WAY ITEMS

	EX	PR
Future ROW Corner Monument		
ROW Marker		
ROW Line		
Easement		
Temporary Easement		

Illinois Department of Transportation

PASSED January 1, 2021
ENGINEER OF POLICY AND PROCEDURES

APPROVED January 1, 2021
ENGINEER OF DESIGN AND ENVIRONMENT

ISSUED 1-1-07

STANDARD SYMBOLS, ABBREVIATIONS AND PATTERNS

(Sheet 5 of 9)

STANDARD 000001-08

PAVEMENT MARKINGS (contd.)

	EX	PR
Urban U-Turn		
Urban Combined U-Turn		
Rural Combination Left		
Rural Combination Right		
Rural Left Turn Arrow		
Rural Right Turn Arrow		
Rural Left Turn Only		ONLY ONLY ONLY
Rural Right Turn Only		
Rural Thru Only		
Rural Thru Arrow		
Rural Lt & Rt Turn Arrow		
Bike Lane Symbol		LANE BIKE
Bike Lane Text		
Bike Path Shared		
Bike Shared Roadway		
Lane Drop Symbol		
Wrong Way Arrow		

Illinois Department of Transportation

PASSED January 1, 2021
ENGINEER OF POLICY AND PROCEDURES

APPROVED January 1, 2021
ENGINEER OF DESIGN AND ENVIRONMENT

ISSUED 1-1-07

STANDARD SYMBOLS, ABBREVIATIONS AND PATTERNS

(Sheet 6 of 9)

STANDARD 000001-08

RIGHT OF WAY ITEMS (contd.)

	EX	PR
Access Control Line		AC
Access Control Line & ROW	AC	AC
Access Control Line & ROW with Fence	AC	AC
Excess ROW Line		XS

ROADWAY PLAN ITEMS

	EX	PR
Cable Barrier		
Concrete Barrier		
Edge of Pavement		
Bit Shoulders, Medians and C&G Line		
Aggregate Shoulder		
Sidewalks, Driveways		
Guardrail		
Guardrail Post		
Traffic Sign		
Corrugated Median		
Impact Attenuator		
North Arrow with District Office (Half Size)	N	
Match Line		STA. 45+00
Slope Limit Line		
Typical Cross-Section Line		

ROADWAY PROFILES

	EX	PR
P.I. Indicator		
Point Indicator		
Earthworks Balance Point		
Begin Point		
Vert. Curve Data	VPI = ELEV= L = E =	VPI = ELEV= L = E =
Ditch Profile Left Side		
Ditch Profile Right Side		
Roadway Profile Line		
Storm Sewer Profile Left Side		
Storm Sewer Profile Right Side		

SIGNING ITEMS

	EX	PR
Cone, Drum or Barricade		
Barricade Type II		
Barricade Type III		
Barricade With Edge Line		
Flashing Light Sign		
Panels I		
Panels II		
Direction of Traffic		
Sign Flag (Half Size)		

SIGNING ITEMS (contd.)

	EX	PR
Reverse Left W1-4L (Half Size)		
Reverse Right W1-4R (Half Size)		
Two Way Traffic Sign W6-3 (Half Size)		
Detour Ahead W20-2(O) (Half Size)		DETOUR AHEAD
Left Lane Closed Ahead W20-5L(O) (Half Size)		LEFT LANE CLOSED AHEAD
Right Lane Closed Ahead W20-5R(O) (Half Size)		RIGHT LANE CLOSED AHEAD
Road Closed Ahead W20-3(O) (Half Size)		ROAD CLOSED AHEAD
Road Construction Ahead W20-1-(O) (Half Size)		ROAD CONSTRUCTION AHEAD
Single Lane Ahead (Half Size)		SINGLE LANE AHEAD
Transition Left W4-2L (Half Size)		
Transition Right W4-2R (Half Size)		

Illinois Department of Transportation

PASSED January 1, 2021
ENGINEER OF POLICY AND PROCEDURES

APPROVED January 1, 2021
ENGINEER OF DESIGN AND ENVIRONMENT

ISSUED 1-07

STANDARD SYMBOLS, ABBREVIATIONS AND PATTERNS

(Sheet 7 of 9)

STANDARD 000001-08

SIGNING ITEMS (contd.)

	EX	PR
One Way Arrow Lrg. W1-6-(O) (Half Size)		
Two Way Arrow Large W1-7-(O) (Half Size)		
Detour M4-10L-(O) (Half Size)		DETOUR
Detour M4-10R-(O) (Half Size)		DETOUR
One Way Left R6-1L (Half Size)		ONE WAY
One Way Right R6-1R (Half Size)		ONE WAY
Left Turn Lane R3-I100L (Half Size)		LEFT TURN LANE
Keep Left R4-7AL (Half Size)		KEEP LEFT
Keep Left R4-7BL (Half Size)		KEEP LEFT
Keep Right R4-7AR (Half Size)		KEEP RIGHT
Keep Right R4-7BR (Half Size)		KEEP RIGHT
Stop Here On Red R10-6-AL (Half Size)		STOP HERE ON RED
Stop Here On Red R10-6-AR (Half Size)		STOP HERE ON RED
No Left Turn R3-2 (Half Size)		
No Right Turn R3-1 (Half Size)		
Road Closed R11-2 (Half Size)		ROAD CLOSED
Road Closed Thru Traffic R11-2 (Half Size)		ROAD CLOSED TO THRU TRAFFIC

STRUCTURES ITEMS

	EX	PR
Box Culvert Barrel		
Box Culvert Headwall		
Bridge Pier		
Bridge		
Retaining Wall		
Temporary Sheet Piling		

TRAFFIC SHEET ITEMS

	EX	PR
Cable Number		
Left Turn Green	G	G
Left Turn Yellow	Y	Y
Signal Backplate		
Signal Section 8" (200 mm)		
Signal Section 12" (300 mm)		
Walk/Don't Walk Letters	DW W	DW W
Walk/Don't Walk Symbols		

TRAFFIC SIGNAL ITEMS

	EX	PR
Galv. Steel Conduit		
Underground Cable		
Detector Loop Line		
Detector Loop Large		
Detector Loop Small		
Detector Loop Quadrapole		

Illinois Department of Transportation

PASSED January 1, 2021
ENGINEER OF POLICY AND PROCEDURES

APPROVED January 1, 2021
ENGINEER OF DESIGN AND ENVIRONMENT

ISSUED 1-1-07

STANDARD SYMBOLS, ABBREVIATIONS AND PATTERNS

(Sheet 8 of 9)

STANDARD 000001-08

TRAFFIC SIGNAL ITEMS (contd.)

	EX	PR
Detector Raceway		
Aluminum Mast Arm		
Steel Mast Arm		
Veh. Detector Magnetic		
Conduit Splice		
Controller		
Gulfbox Junction		
Wood Pole		
Temp. Signal Head		
Handhole		
Double Handhole		
Heavy Duty Handhole		
Junction Box		
Ped. Pushbutton Detector		
Ped. Signal Head		
Power Pole Service		
Priority Veh. Detector		
Signal Head		
Signal Head w/Backplate		
Signal Post		
Closed Circuit TV		
Video Detector System		

UNDERGROUND UTILITY ITEMS

	EX	PR	ABANDONED
Cable TV	CTV	CTV	CTV
Electric Cable	E	E	E
Fiber Optic	FO	FO	FO
Gas Pipe	G	G	G
Oil Pipe	O	O	O
Sanitary Sewer			
Telephone Cable	T	T	T
Water Pipe	W	W	W

UTILITIES ITEMS

	EX	PR
Controller		
Double Handhole		
Fire Hydrant		
GuyWire or Deadman Anchor		
Handhole		
Heavy Duty Handhole		
Junction Box		
Light Pole		
Manhole		
Monitoring Well (Gasoline)		
Pipeline Warning Sign		
Power Pole		
Power Pole with Light		
Sanitary Sewer Cleanout		
Splice Box Above Ground		
Telephone Splice Box Above Ground		
Telephone Pole		

UTILITY ITEMS (contd.)

	EX	PR
Traffic Signal		
Traffic Signal Control Box		
Water Meter		
Water Meter Valve Box		
Profile Line		
Aerial Power Line	A A	A A

VEGETATION ITEMS

	EX	PR
Deciduous Tree		
Bush or Shrub		
Evergreen Tree		
Stump		
Orchard/Nursery Line		
Vegetation Line		
Woods & Bush Line		

WATER FEATURE ITEMS

	EX	PR
Stream or Drainage Ditch		
Waters Edge		
Water Surface Indicator		
Water Point		
Disappearing Ditch		
Marsh		
Marsh/Swamp Boundary		

Illinois Department of Transportation

PASSED January 1, 2021
ENGINEER OF POLICY AND PROCEDURES

APPROVED January 1, 2021
ENGINEER OF DESIGN AND ENVIRONMENT

ISSUED 1-1-07

STANDARD SYMBOLS, ABBREVIATIONS AND PATTERNS

(Sheet 9 of 9)

STANDARD 000001-08

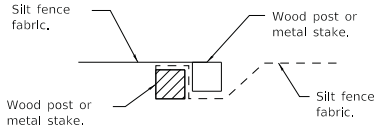

Place end-post (stake) of first silt fence adjacent to end-post (stake) of second silt fence with fabric positioned as swown.

STEP 1

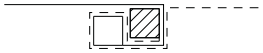

Rotate posts (stakes) together 180° clockwise and drive both posts (stakes) 18 (450) into ground.

STEP 2

ATTACHING TWO SILT FILTER FENCES

(Not applicable for J-hooks)

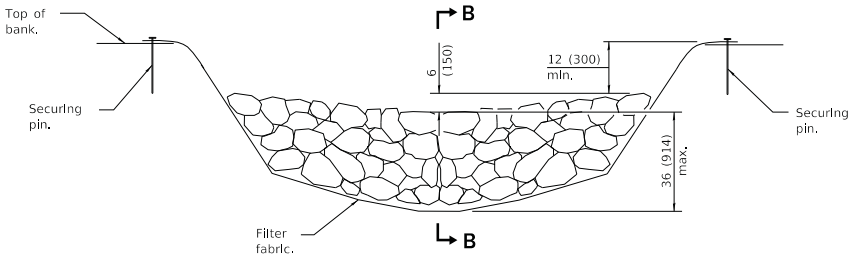

ELEVATION

* When the ditch check is within the clear zone and the road is open to traffic, the traffic approach slope of the aggregate shall be 1:4 (V:H).

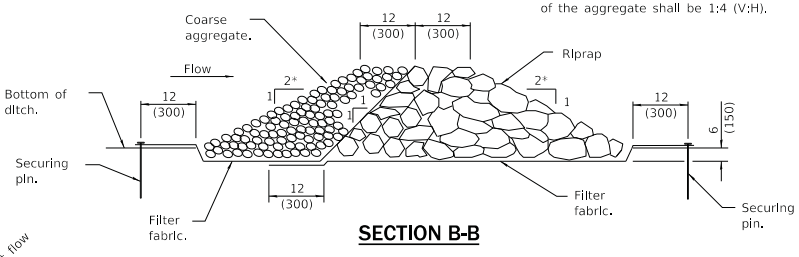

SECTION B-B

AGGREGATE DITCH CHECK

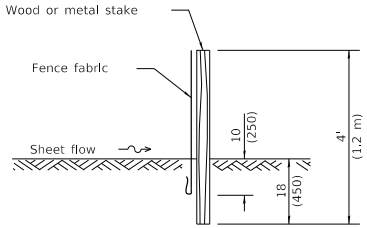

SLICE METHOD

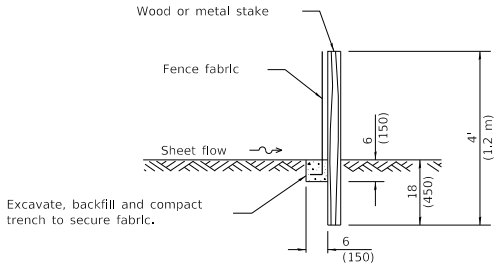

TRENCH METHOD

SECTION A-A

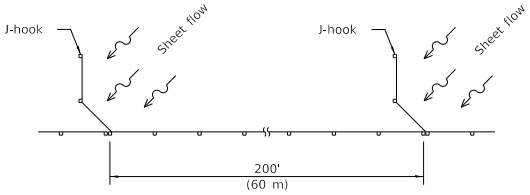

SILT FILTER J-HOOK PLACEMENT

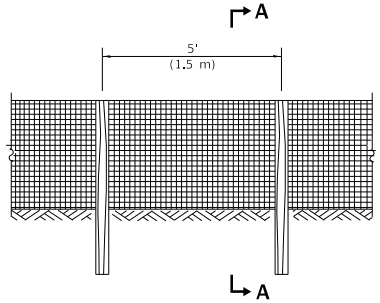

ELEVATION

SILT FILTER FENCE AS A PERIMETER EROSION BARRIER

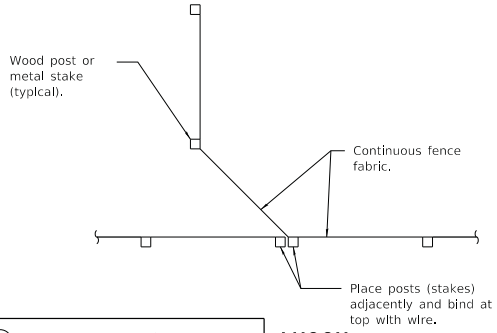

J-HOOK

GENERAL NOTES

The installation details and dimensions shown for perimeter erosion barriers shall also apply for inlet and pipe protection.

All dimensions are in inches (millimeters) unless otherwise shown.

Illinois Department of Transportation

PASSED January 1, 2013
Michael Brand
ENGINEER OF POLICY AND PROCEDURES

APPROVED January 1, 2013
ENGINEER OF DESIGN AND ENVIRONMENT

ISSUED 1-1-07

DATE	REVISIONS
1-1-13	Corrected notation for
	flowline (FL) on SEDIMENT
	BASIN ELEVATION.
1-1-12	Omitted hay/straw perimeter
	barrier. Added SLICE METHOD
	to SECTION A-A.

TEMPORARY EROSION CONTROL SYSTEMS

(Sheet 1 of 2)

STANDARD 280001-07

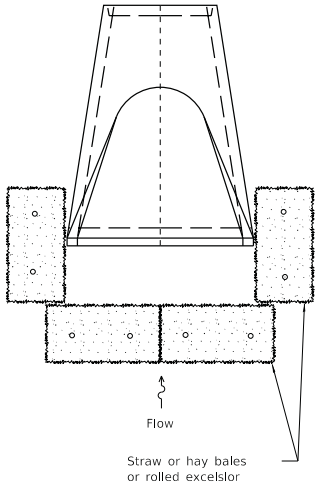

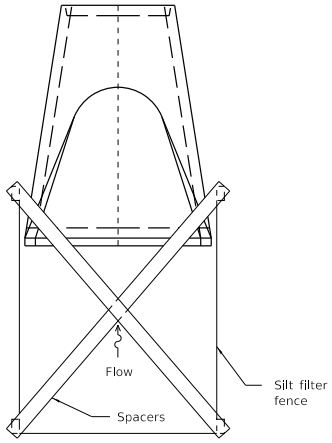

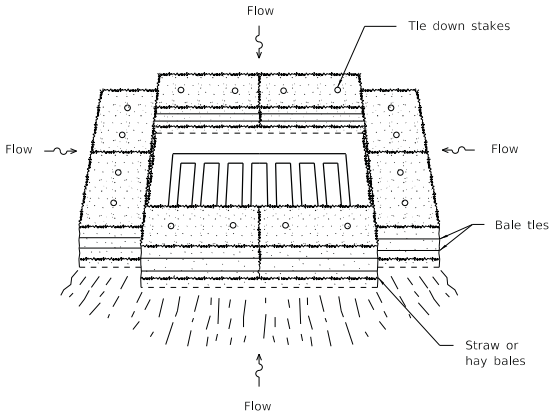

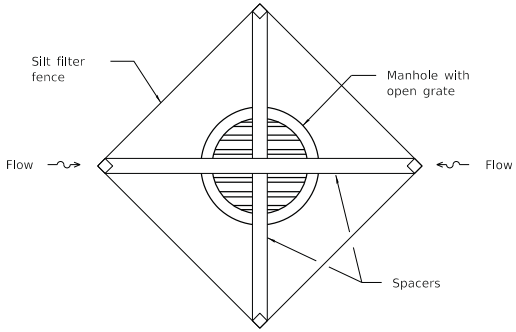

INLET AND PIPE PROTECTION

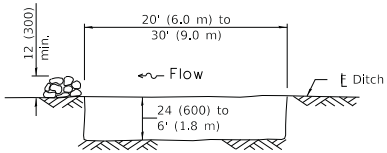

The performance of the basin will improve if put into a series.

ELEVATION

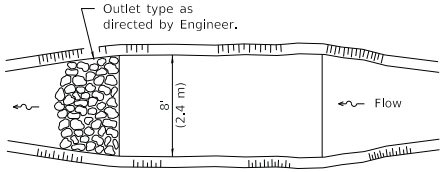

The long dimension should be parallel with the direction of the flow. Accumulated silt shall be removed anytime the basins become 75% filled.

PLAN

SEDIMENT BASIN

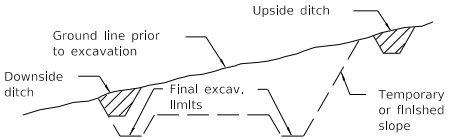

TYPICAL CUT CROSS-SECTION

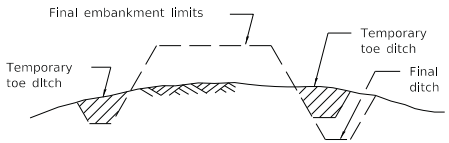

TYPICAL FILL CROSS-SECTION

TEMPORARY DITCHES FOR CUT & FILL SECTIONS

Illinois Department of Transportation

PASSED January 1, 2013
Michael Brand
ENGINEER OF POLICY AND PROCEDURES

APPROVED January 1, 2013
ENGINEER OF DESIGN AND ENVIRONMENT

ISSUED 1-1-07

TEMPORARY EROSION CONTROL SYSTEMS

(Sheet 2 of 2)

STANDARD 280001-07

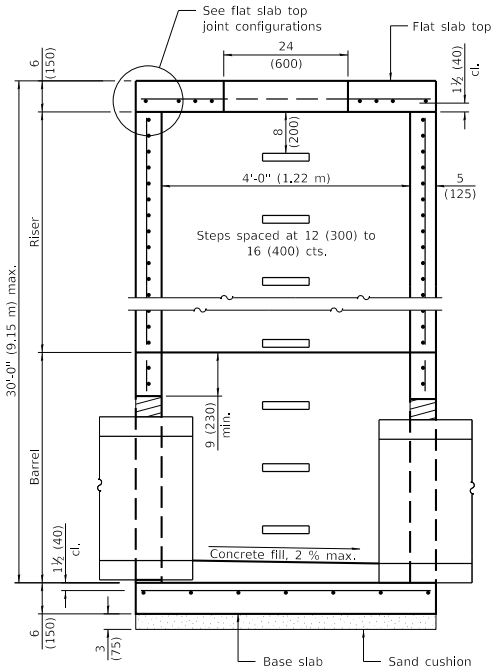

SECTION PARALLEL TO PIPE

(Without conical top riser)

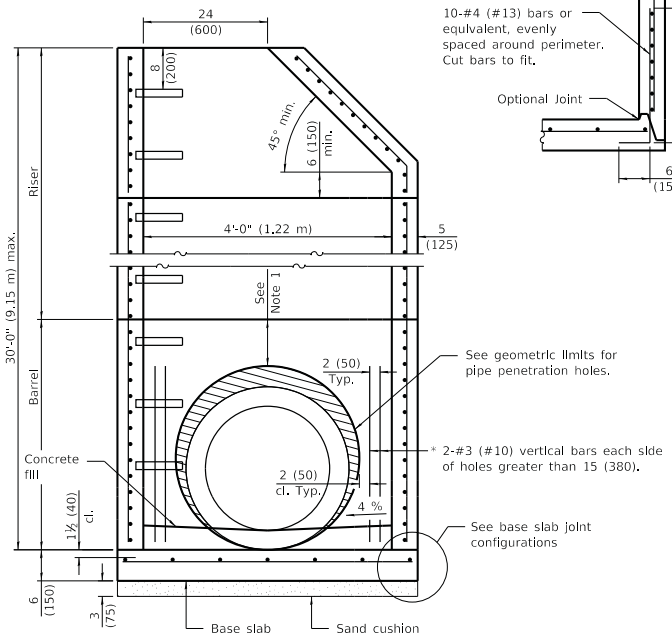

SECTION PERPENDICULAR TO PIPE

(With conical top riser)

* As an alternate, the barrel wall reinforcement may be reduced to riser wall reinforcement with #3 (#10) bars placed around the pipe penetration holes as shown. This option may be utilized when the pipe penetration holes are formed as opposed to cored.

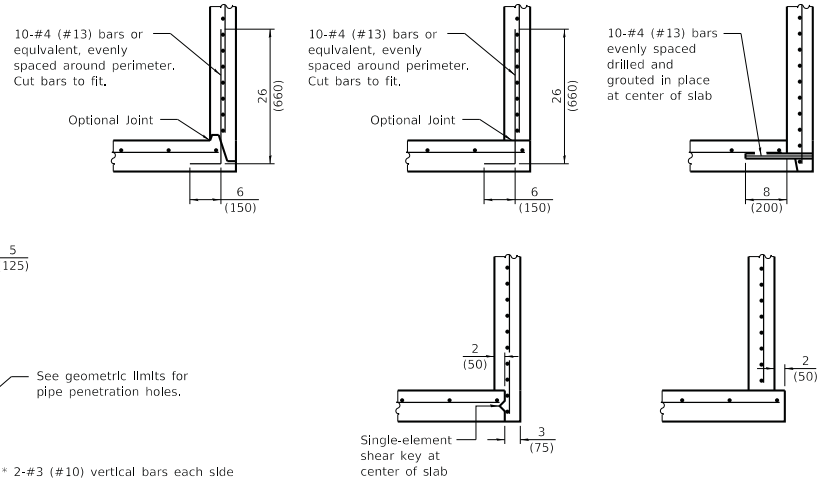

BASE SLAB JOINT CONFIGURATIONS

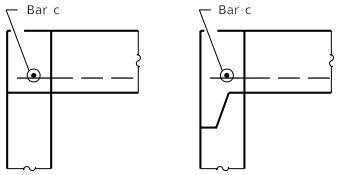

FLAT SLAB TOP JOINT CONFIGURATIONS

(Shown at access hole)

GEOMETRIC LIMITS FOR PIPE PENETRATION HOLES

Note 1: A minimum of 9 (230) of monolithic reinforced concrete shall be maintained above pipe penetration holes > 24 (600).

Note 2: A minimum 12 (300) inside arc length of reinforced concrete shall be maintained between pipe penetration holes > 15 (380).

Note 3: A maximum of 60 percent of the inside perimeter of the reinforced concrete manhole walls may be removed.

Note 4: Horizontal joints that intersect pipe penetration holes > 15 (380) shall have one joint splice for every location around the perimeter of the joint where the inside arc length between pipe penetration holes is < 24 (600). See joint splice detail.

Note 5: The recommended pipe penetration hole is equal to the O.D. of the pipe plus 4 (100).

Note 6: Only pipe penetration holes ≤ 15 (380) are allowed in riser sections.

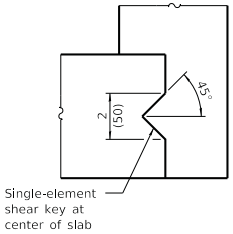

SHEAR KEY GEOMETRY

(Reinforcement not shown for clarity)

GENERAL NOTES

The manufacturer shall ensure that all precast manhole sections are additionally reinforced where required to resist damage from handling, shipping and installation stresses.

Lifting holes shall be located in the sections as per the manufacturer's recommendations.

See Standard 602701 for details of manhole steps.

All dimensions are in inches (millimeters) unless otherwise noted.

Illinois Department of Transportation

PASSED January 1, 2021
ENGINEER OF POLICY AND PROCEDURES

APPROVED January 1, 2021
ENGINEER OF DESIGN AND ENVIRONMENT

ISSUED 1-1-07

DATE	REVISIONS
1-1-21	Revised Note 1 and lifting hole
	general note.
3-1-19	Moved wall reinforcement from
	inside face to middle.

PRECAST MANHOLE TYPE A 4' (1.22 m) DIAMETER

(Sheet 1 of 2)

STANDARD 602401-07

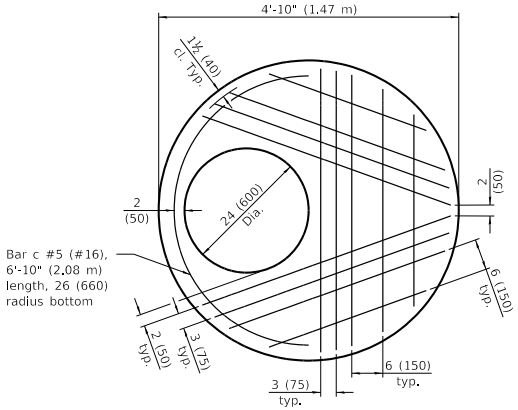

PLAN - FLAT SLAB TOP

(Showing layout of reinforcement bars and c bars)

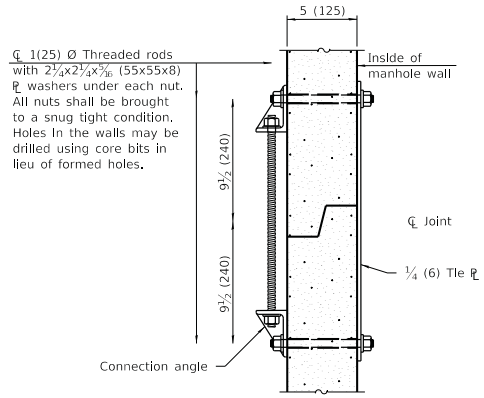

JOINT SPLICE

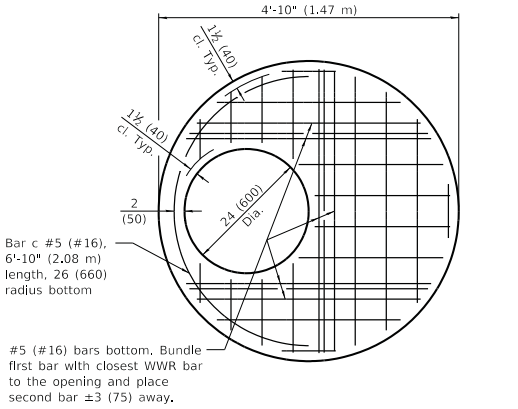

PLAN - FLAT SLAB TOP

(Showing layout of welded wire reinforcement and c bars)

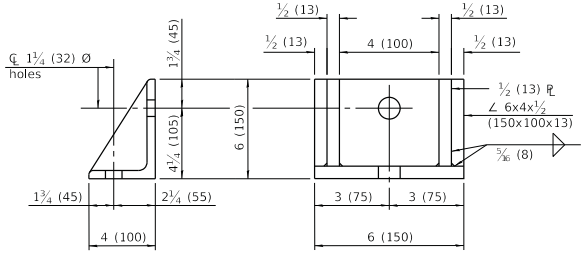

CONNECTION ANGLE

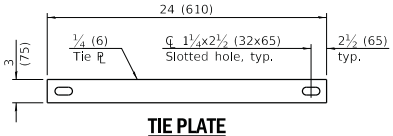

TIE PLATE

FLAT SLAB TOP REINFORCEMENT

Location	WWR (each direction)		Rebar		
	A_s (min.)	Spacing (max.)	A_s (min.)	Spacing (max.)	Bar Size
Bottom Mat	** 0.62 sq. in./ft. (1312 sq. mm/m)	6 (150)	See plan view for rebar orientation and spacing and this table for bar size		#5 (#16)

** Only one layer of WWR permitted to avoid congestion.

WALL REINFORCEMENT

Location	Orientation	WWR or Rebar	
		A_s (min.)	Spacing (max.)
Riser	Circumferential	0.12 sq. in./ft. (254 sq. mm/m)	6 (150)
	Vertical	0.045 sq. in./ft. (95 sq. mm/m)	8 (200)
Barrel	Circumferential	0.12 sq. in./ft. (254 sq. mm/m)	6 (150)
	Vertical	0.16 sq. in./ft. (339 sq. mm/m)	4 (100)

BASE SLAB REINFORCEMENT

Location	Total Height	WWR or Rebar (each direction)	
		A_s (min.)	Spacing (max.)
Top Mat	≤ 20 ft. (6.10 m)	0.24 sq. in./ft. (508 sq. mm/m)	10 (250)
	> 20 ft. (6.10 m)	0.24 sq. in./ft. (508 sq. mm/m)	10 (250)

Illinois Department of Transportation

PASSED January 1, 2021
ENGINEER OF POLICY AND PROCEDURES

APPROVED January 1, 2021
ENGINEER OF DESIGN AND ENVIRONMENT

ISSUED 1-1-07

PRECAST MANHOLE TYPE A 4' (1.22 m) DIAMETER

(Sheet 2 of 2)

STANDARD 602401-07

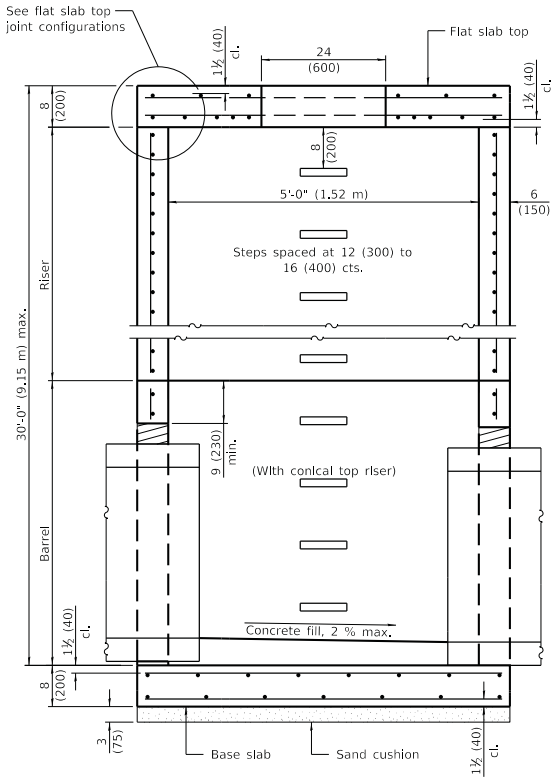

SECTION PARALLEL TO PIPE

(Without conical top riser)

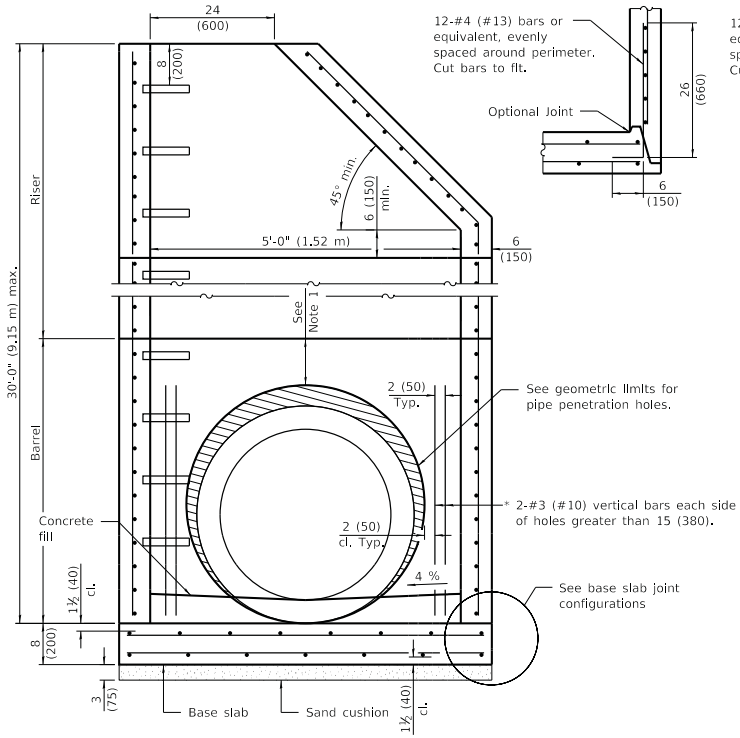

SECTION PERPENDICULAR TO PIPE

(With conical top riser)

* As an alternate, the barrel wall reinforcement may be reduced to riser wall reinforcement with #3 (#10) bars placed around the pipe penetration holes as shown. This option may be utilized when the pipe penetration holes are formed as opposed to cored.

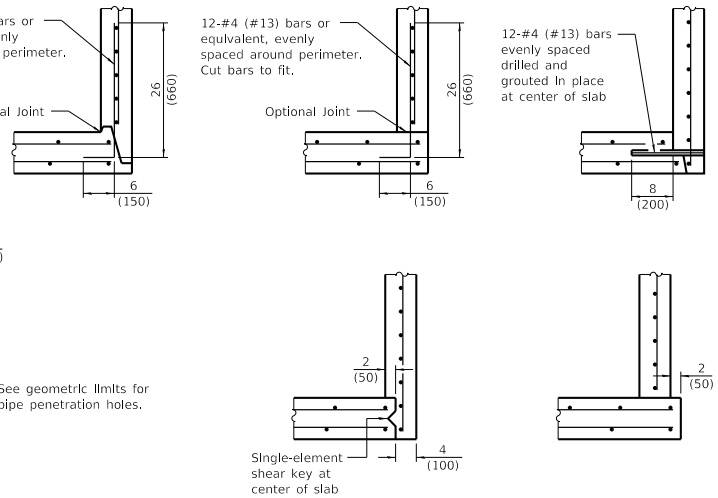

BASE SLAB JOINT CONFIGURATIONS

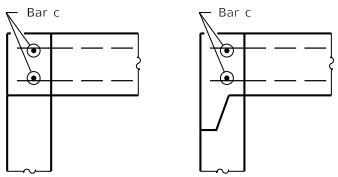

FLAT SLAB TOP JOINT CONFIGURATIONS

(Shown at access hole)

GEOMETRIC LIMITS FOR PIPE PENETRATION HOLES

Note 1: A minimum of 9 (230) of monolithic reinforced concrete shall be maintained above pipe penetration holes > 32 (810).

Note 2: A minimum 12 (300) inside arc length of reinforced concrete shall be maintained between pipe penetration holes > 15 (380).

Note 3: A maximum of 60 percent of the inside perimeter of the reinforced concrete manhole walls may be removed.

Note 4: Horizontal joints that intersect pipe penetration holes > 15 (380) shall have one joint splice for every location around the perimeter of the joint where the inside arc length between pipe penetration holes is < 24 (600). See joint splice detail.

Note 5: The recommended pipe penetration hole is equal to the O.D. of the pipe plus 4 (100).

Note 6: Only pipe penetration holes ≤ 15 (380) are allowed in riser sections.

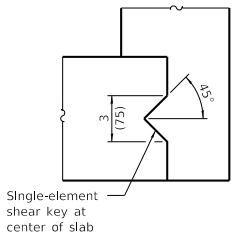

SHEAR KEY GEOMETRY

(Reinforcement not shown for clarity)

GENERAL NOTES

The manufacturer shall ensure that all precast manhole sections are additionally reinforced where required to resist damage from handling, shipping and installation stresses.

Lifting holes shall be located in the sections as per the manufacturer's recommendations.

See Standard 602701 for details of manhole steps.

All dimensions are in inches (millimeters) unless otherwise noted.

Illinois Department of Transportation

PASSED January 1, 2021
ENGINEER OF POLICY AND PROCEDURES

APPROVED January 1, 2021
ENGINEER OF DESIGN AND ENVIRONMENT

ISSUED 1-1-18

DATE	REVISIONS
1-1-21	Revised Note 1 and lifting hole
	general note.
3-1-19	Moved wall reinforcement from
	inside face to middle.

PRECAST MANHOLE TYPE A 5' (1.52 m) DIAMETER

(Sheet 1 of 2)

STANDARD 602402-03

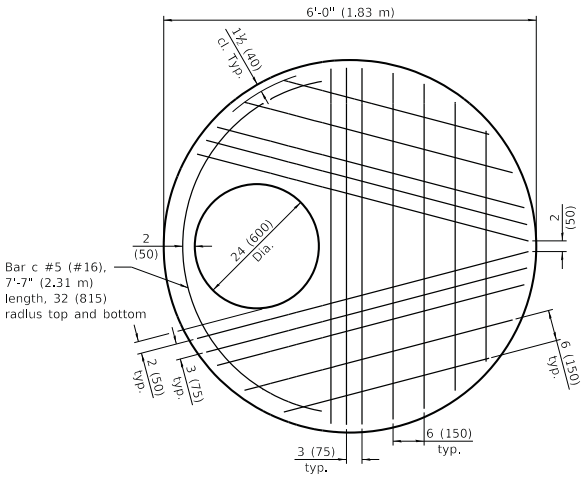

PLAN - FLAT SLAB TOP

(Showing layout of bottom reinforcement bars and c bars)

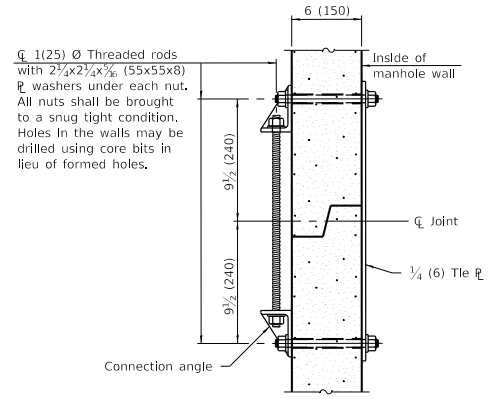

JOINT SPLICE

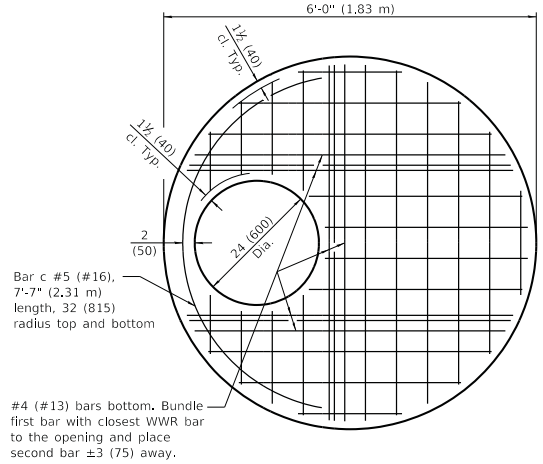

PLAN - FLAT SLAB TOP

(Showing layout of welded wire reinforcement and c bars)

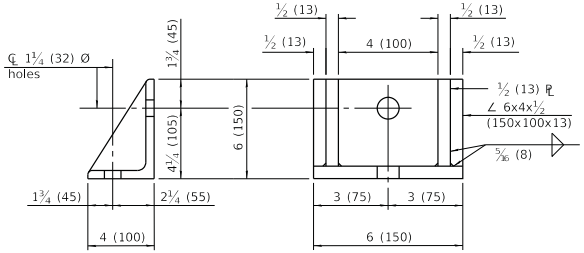

CONNECTION ANGLE

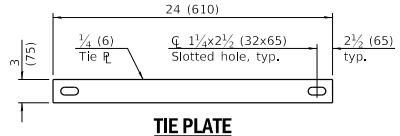

TIE PLATE

FLAT SLAB TOP REINFORCEMENT

Location	WWR (each direction)		Rebar (each direction except as noted)		
	A_s (min.)	Spacing (max.)	A_s (min.)	Spacing (max.)	Bar Size
Top Mat	0.11 sq. in./ft. (233 sq. mm/m)	18 (450)	0.11 sq. in./ft. (233 sq. mm/m)	18 (450)	#3 or #4 (#10) (#13)
Bottom Mat	** 0.40 sq. in./ft. (847 sq. mm/m)	6 (150)	See plan view for rebar orientation and spacing and this table for bar size		#4 (#13)

** Only one layer of WWR permitted to avoid congestion.

WALL REINFORCEMENT

Location	Orientation	WWR or Rebar	
		A_s (min.)	Spacing (max.)
Riser	Circumferential	0.15 sq. in./ft. (318 sq. mm/m)	6 (150)
	Vertical	0.045 sq. in./ft. (95 sq. mm/m)	8 (200)
Barrel	Circumferential	0.15 sq. in./ft. (318 sq. mm/m)	6 (150)
	Vertical	0.16 sq. in./ft. (339 sq. mm/m)	4 (100)

BASE SLAB REINFORCEMENT

Location	Total Height	WWR or Rebar (each direction)	
		A_s (min.)	Spacing (max.)
Top Mat	≤ 20 ft. (6.10 m)	0.24 sq. in./ft. (508 sq. mm/m)	10 (250)
	> 20 ft. (6.10 m)	0.28 sq. in./ft. (593 sq. mm/m)	8 (200)
Bottom Mat	All	0.11 sq. in./ft. (233 sq. mm/m)	18 (450)

Illinois Department of Transportation

PASSED January 1, 2021
ENGINEER OF POLICY AND PROCEDURES

APPROVED January 1, 2021
ENGINEER OF DESIGN AND ENVIRONMENT

ISSUED 1-1-18

PRECAST MANHOLE TYPE A 5' (1.52 m) DIAMETER

(Sheet 2 of 2)

STANDARD 602402-03

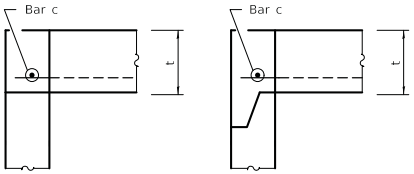

FLAT SLAB TOP JOINT CONFIGURATIONS
FOR D = 36 (900) AND D = 4'-0" (1.22 m)
(Shown at access hole)

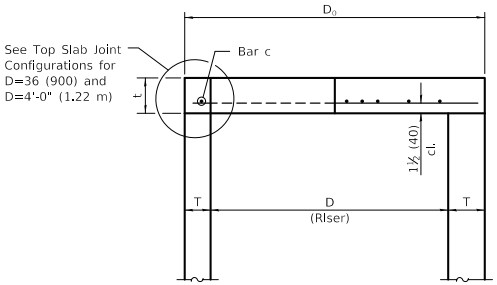

SECTION THRU FLAT SLAB TOP
FOR D = 36 (900) AND D = 4'-0" (1.22 m)

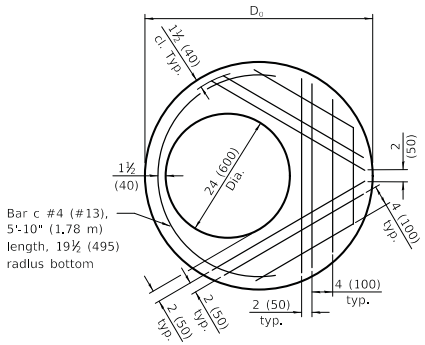

PLAN - FLAT SLAB TOP FOR D = 36 (900)
(Showing layout of reinforcement bars and c bars)

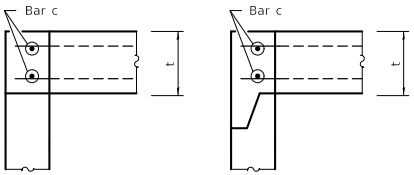

FLAT SLAB TOP JOINT CONFIGURATIONS
D = 5'-0" (1.52 m)
(Shown at access hole)

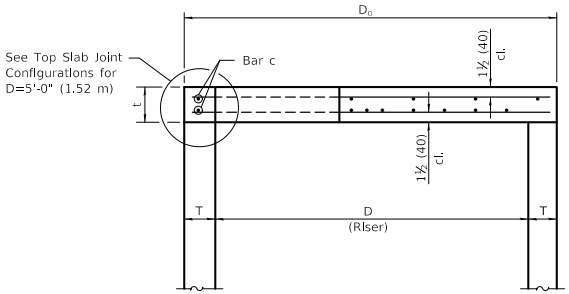

SECTION THRU FLAT SLAB TOP
FOR D = 5'-0" (1.52 m)

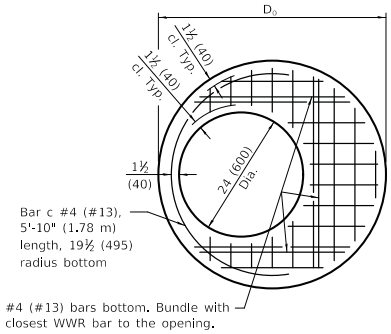

PLAN - FLAT SLAB TOP FOR D = 36 (900)
(Showing layout of welded wire reinforcement and c bars)

TABLE

D	T	D_0 (min.)	t
36 (900)	See applicable Standards	D + 2T	6 (150)
4'-0" (1.2 m)			6 (150)
5'-0" (1.5 m)			8 (200)

GENERAL NOTES

The flat slab top may be used in lieu of the tapered tops shown on Standards 602001, 602016, or 602306 at the option of the Contractor or when field conditions prohibit the use of tapered tops.

Lifting holes shall be located in the sections as per the manufacturer's recommendations.

All dimensions are in inches (millimeters) unless otherwise shown.

Illinois Department of Transportation

PASSED January 1, 2019
ENGINEER OF POLICY AND PROCEDURES

APPROVED January 1, 2019
ENGINEER OF DESIGN AND ENVIRONMENT

ISSUED 1-1-97

DATE	REVISIONS
1-1-19	Expanded / refined reinforcement options.
1-1-18	Revised for compliance with LRFD.

PRECAST REINFORCED CONCRETE FLAT SLAB TOP

(Sheet 1 of 2)

STANDARD 602601-06

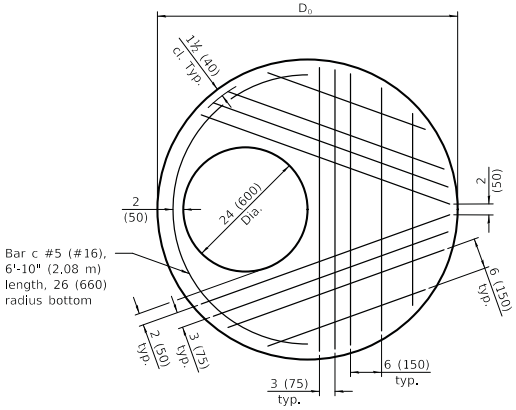

PLAN - FLAT SLAB TOP FOR D = 4'-0" (1.22 m)

(Showing layout of reinforcement bars and c bars)

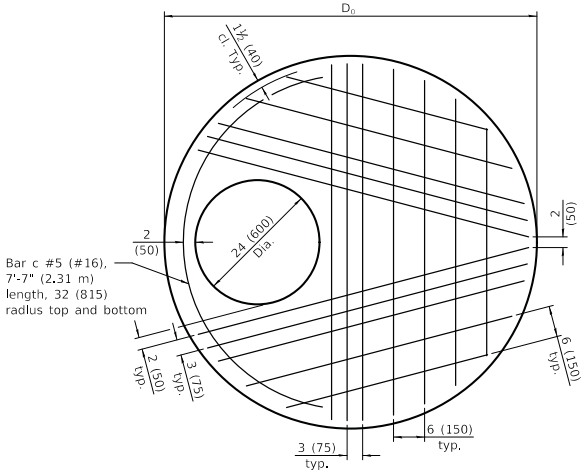

PLAN - FLAT SLAB TOP FOR D = 5'-0" (1.52 m)

(Showing layout of bottom reinforcement bars and c bars)

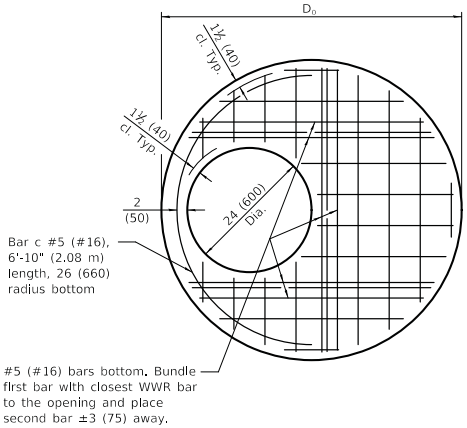

PLAN - FLAT SLAB TOP FOR D = 4'-0" (1.22 m)

(Showing layout of welded wire reinforcement and c bars)

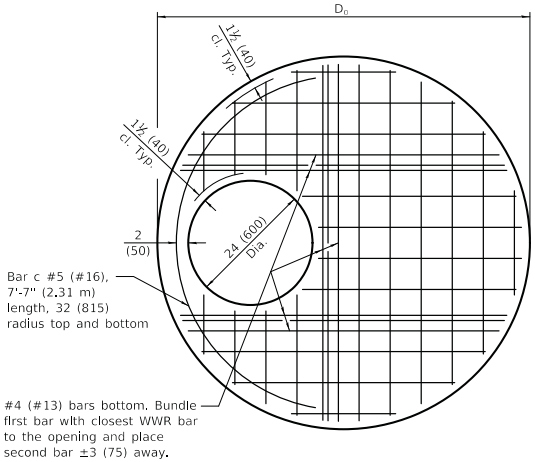

PLAN - FLAT SLAB TOP FOR D = 5'-0" (1.52 m)

(Showing layout of welded wire reinforcement and c bars)

FLAT SLAB TOP REINFORCEMENT FOR D = 36 (900)

Location	WWR (each direction)		Rebar		
	A_s (min.)	Spacing (max.)	A_s (min.)	Spacing (max.)	Bar Size
Bottom Mat	* 0.60 sq. in./ft. (1270 sq. mm/m)	6 (150)	See plan view for rebar orientation and spacing and this table for bar size		#4 (#13)

FLAT SLAB TOP REINFORCEMENT FOR D = 4'-0" (1.22 m)

Location	WWR (each direction)		Rebar		
	A_s (min.)	Spacing (max.)	A_s (min.)	Spacing (max.)	Bar Size
Bottom Mat	* 0.62 sq. in./ft. (1312 sq. mm/m)	6 (150)	See plan view for rebar orientation and spacing and this table for bar size		#5 (#16)

FLAT SLAB TOP REINFORCEMENT FOR D = 5'-0" (1.52 m)

Location	WWR (each direction)		Rebar (each direction except as noted)		
	A_s (min.)	Spacing (max.)	A_s (min.)	Spacing (max.)	Bar Size
Top Mat	0.11 sq. in./ft. (233 sq. mm/m)	18 (450)	0.11 sq. in./ft. (233 sq. mm/m)	18 (450)	#3 or #4 (#10) (#13)
Bottom Mat	* 0.40 sq. in./ft. (847 sq. mm/m)	6 (150)	See plan view for rebar orientation and spacing and this table for bar size		#4 (#13)

* Only one layer of WWR permitted to avoid congestion.

Illinois Department of Transportation

PASSED January 1, 2019
ENGINEER OF POLICY AND PROCEDURES

APPROVED January 1, 2019
ENGINEER OF DESIGN AND ENVIRONMENT

ISSUED 1-1-07

PRECAST REINFORCED CONCRETE FLAT SLAB TOP

(Sheet 2 of 2)

STANDARD 602601-06

CAST IRON STEPS

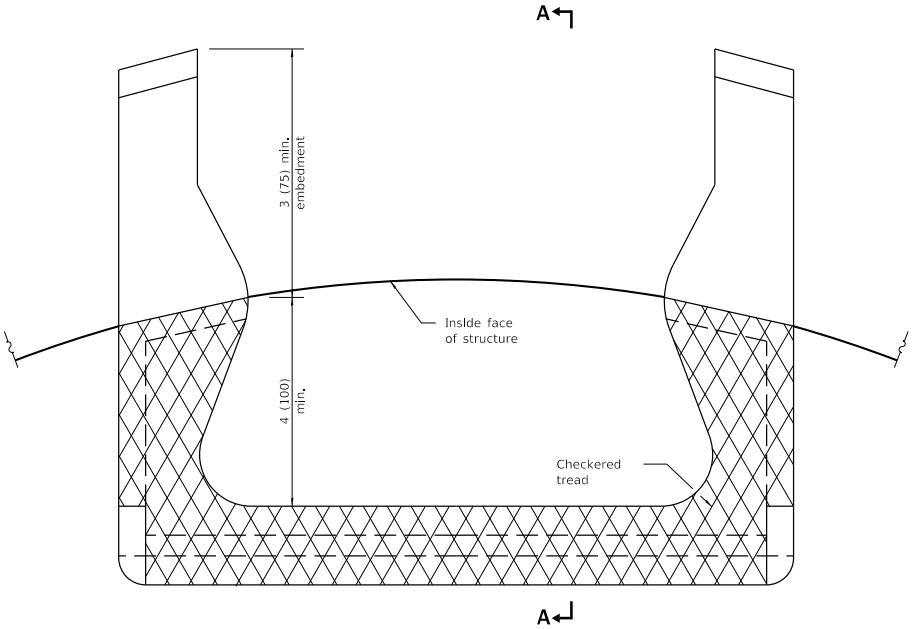

PLAN VIEW

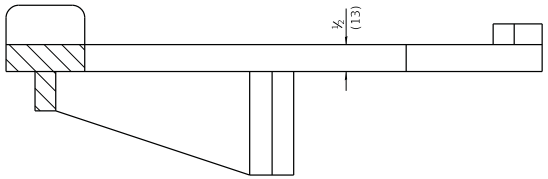

SECTION A-A

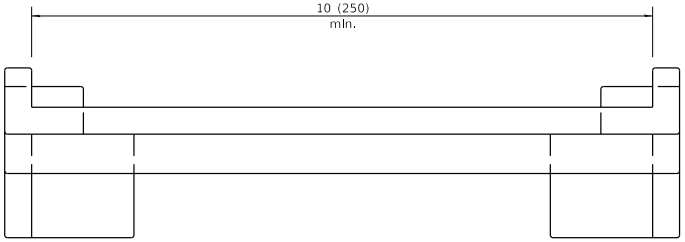

ELEVATION VIEW

All dimensions are in inches (millimeters) unless otherwise shown.

DATE	REVISIONS
1-1-09	Switched units to
	English (metric).
4-1-06	Revised title, drawings,
	and added plastic
	steps on sheet 2.

MANHOLE STEPS

(Sheet 1 of 2)

STANDARD 602701-02

Illinois Department of Transportation

PASSED January 1, 2009
ENGINEER OF POLICY AND PROCEDURES

APPROVED January 1, 2009
ENGINEER OF DESIGN AND ENVIRONMENT

ISSUED 1-1-07

PLASTIC STEPS

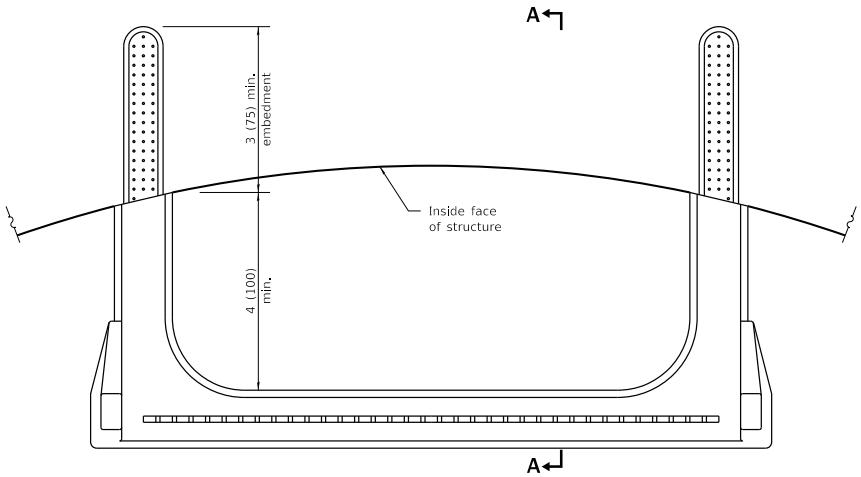

PLAN VIEW

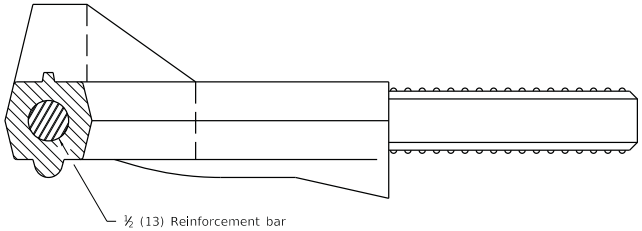

SECTION A-A

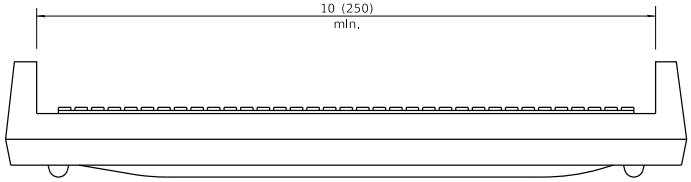

ELEVATION VIEW

Illinois Department of Transportation

PASSED January 1, 2009

ENGINEER OF POLICY AND PROCEDURES

APPROVED January 1, 2009

ENGINEER OF DESIGN AND ENVIRONMENT

ISSUED 1-1-07

MANHOLE STEPS

(Sheet 2 of 2)

STANDARD 602701-02

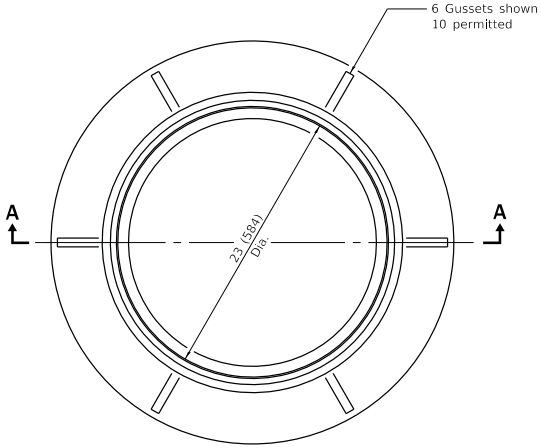

CAST FRAME

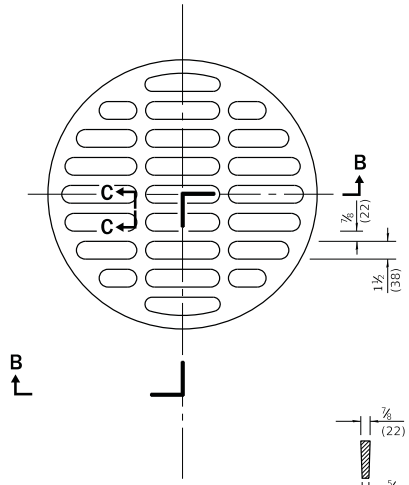

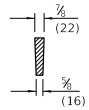

SECTION C-C

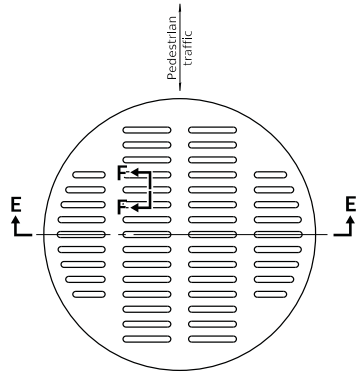

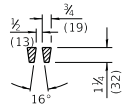

SECTION F-F

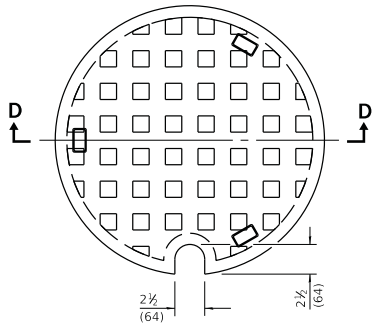

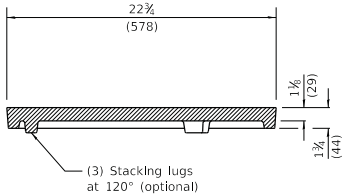

SECTION D-D

CAST CLOSED LID

Gray Iron Lid

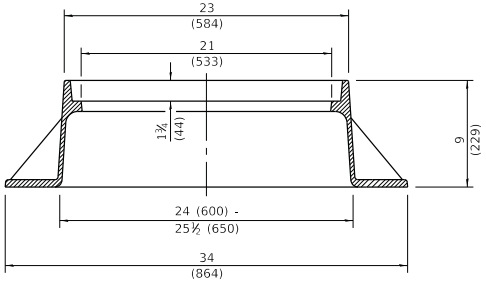

SECTION A-A

Gray Iron

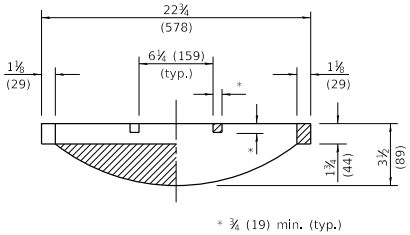

SECTION B-B

CAST OPEN LID

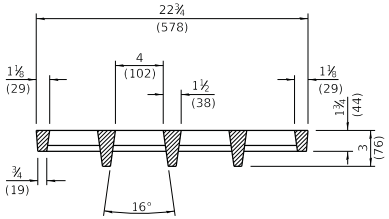

SECTION E-E

ADA COMPLIANT
CAST OPEN LID

All dimensions are in inches (millimeters) unless otherwise shown.

DATE	REVISIONS
1-1-20	Revised dimension in Section B-B
	of cast open lid.
1-1-15	Revised dimensioning of
	frame. Added ADA compliant
	open lid.
1-1-09	Switched units to English (metric).

FRAME AND LIDS TYPE 1

STANDARD 604001-05

Illinois Department of Transportation

PASSED January 1, 2020
ENGINEER OF POLICY AND PROCEDURES

APPROVED January 1, 2020
ENGINEER OF DESIGN AND ENVIRONMENT

ISSUED 1-1-07

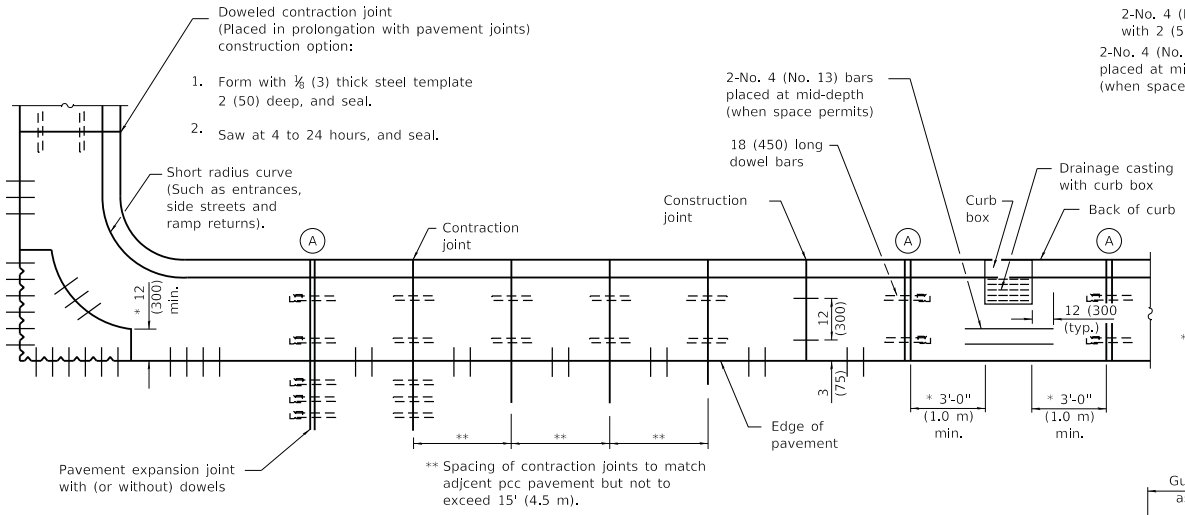

PLAN
ADJACENT TO PCC PAVEMENT OR PCC BASE COURSE

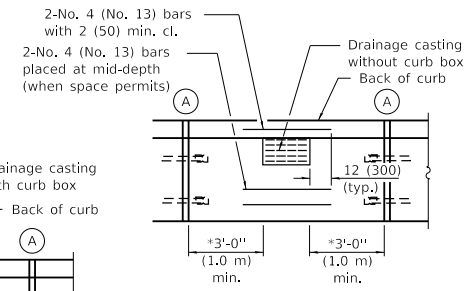

* This dimension shall be adjusted to align with joint on the adjacent pavement

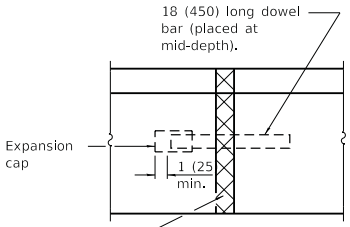

DETAIL (A)
EXPANSION JOINT

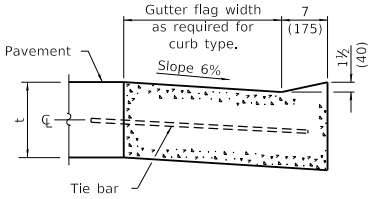

DEPRESSED CURB (TYPICAL)

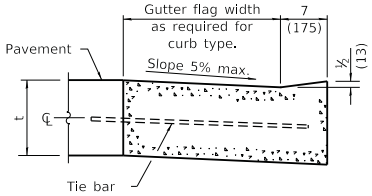

DEPRESSED CURB ADJACENT TO CURB RAMP ACCESSIBLE TO THE DISABLED

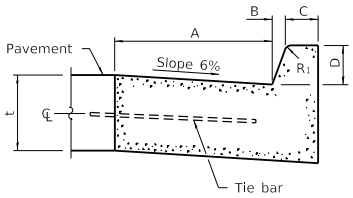

BARRIER CURB

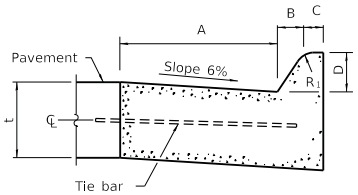

MOUNTABLE CURB

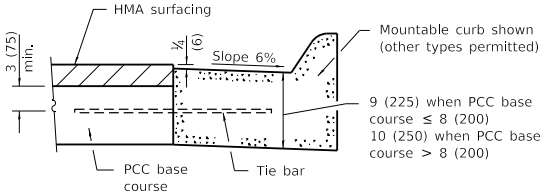

ADJACENT TO PCC BASE COURSE WITH HMA SURFACING

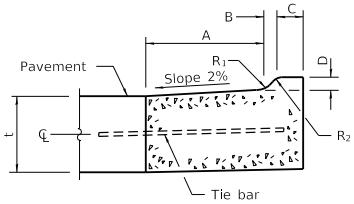

M-2.06 (M-5.15) and M-2.12 (M-5.30)

TABLE OF DIMENSIONS BARRIER CURB					
TYPE	A	B	C	D	R_1
B-6.06 * (B-15.15)	6 (150)	1 (25)	6 (150)	6 (150)	1 (25)
B-6.12 (B-15.3)	12 (300)	1 (25)	6 (150)	6 (150)	1 (25)
B-6.18 (B-15.45)	18 (450)	1 (25)	6 (150)	6 (150)	1 (25)
B-6.24 (B-15.60)	24 (600)	1 (25)	6 (150)	6 (150)	1 (25)
B-9.12 (B-22.30)	12 (300)	2 (50)	5 (125)	9 (225)	1 (25)
B-9.18 (B-22.45)	18 (450)	2 (50)	5 (125)	9 (225)	1 (25)
B-9.24 (B-22.60)	24 (600)	2 (50)	5 (125)	9 (225)	1 (25)

* For corner islands only.

TABLE OF DIMENSIONS MOUNTABLE CURB						
TYPE	A	B	C	D	R_1	R_2
M-2.06 (M-5.15)	6 (150)	2 (50)	4 (100)	2 (50)	3 (75)	2 (50)
M-2.12 (M-5.30)	12 (300)	2 (50)	4 (100)	2 (50)	3 (75)	2 (50)
M-4.06 (M-10.15)	6 (150)	4 (100)	3 (75)	4 (100)	3 (75)	NA
M-4.12 (M-10.30)	12 (300)	4 (100)	3 (75)	4 (100)	3 (75)	NA
M-4.18 (M-10.45)	18 (450)	4 (100)	3 (75)	4 (100)	3 (75)	NA
M-4.24 (M-10.60)	24 (600)	4 (100)	3 (75)	4 (100)	3 (75)	NA
M-6.06 (M-15.15)	6 (150)	6 (150)	2 (50)	6 (150)	2 (50)	NA
M-6.12 (M-15.30)	12 (300)	6 (150)	2 (50)	6 (150)	2 (50)	NA
M-6.18 (M-15.45)	18 (450)	6 (150)	2 (50)	6 (150)	2 (50)	NA
M-6.24 (M-15.60)	24 (600)	6 (150)	2 (50)	6 (150)	2 (50)	NA

GENERAL NOTES

The bottom slope of combination curb and gutter constructed adjacent to pcc pavement shall be the same slope as the subbase or 6% when subbase is omitted.

t = Thickness of pavement.

Longitudinal joint tie bars shall be No. 6 (No. 19) at 36 (900) centers in accordance with details for longitudinal construction joint shown on Standard 420001.

A minimum clearance of 2 (50) between the end of the tie bar and the back of the curb shall be maintained.

The dowel bars shown in contraction joints will only be required for monolithic construction.

See Standard 606301 for details of corner islands.

All dimensions are in inches (millimeters) unless otherwise shown.

Illinois Department of Transportation

PASSED January 1, 2022
ENGINEER OF POLICY AND PROCEDURES
APPROVED January 1, 2022
ENGINEER OF DESIGN AND ENVIRONMENT

ISSUED 1-1-97

DATE	REVISIONS
1-1-22	Revised contraction joint spacing
	adjacent to pcc pavement.
1-1-18	Revised General Note for tie
	bar spacing to 36 (900) cts.

CONCRETE CURB TYPE B AND COMBINATION CONCRETE CURB AND GUTTER

(Sheet 1 of 2)

STANDARD 606001-08

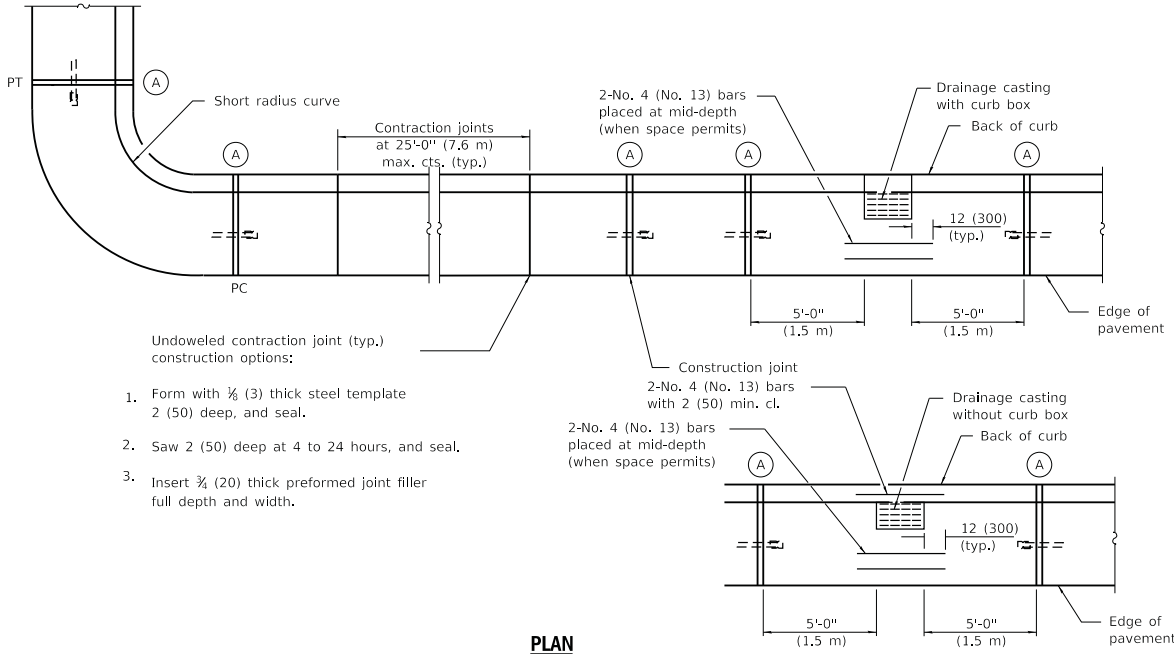

PLAN

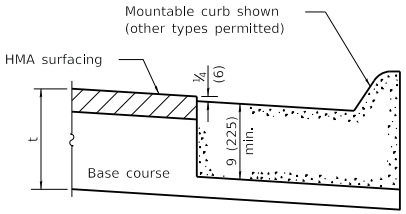

ON DISTURBED SUBGRADE

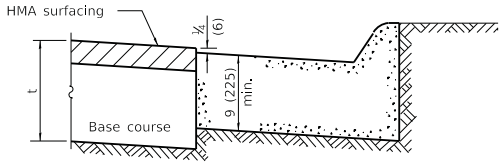

ON UNDISTURBED SUBGRADE

ADJACENT TO FLEXIBLE PAVEMENT

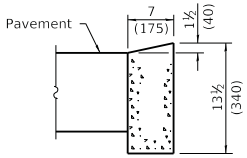

DEPRESSED CURB

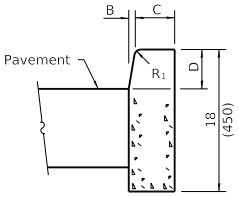

BARRIER CURB

ADJACENT TO FLEXIBLE PAVEMENT

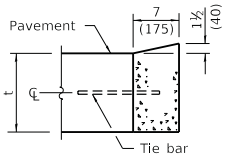

DEPRESSED CURB

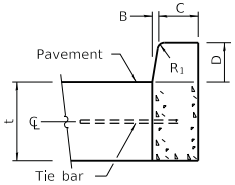

BARRIER CURB

ADJACENT TO PCC PAVEMENT OR PCC BASE COURSE

CONCRETE CURB TYPE B

Illinois Department of Transportation

PASSED January 1, 2022
ENGINEER OF POLICY AND PROCEDURES
APPROVED January 1, 2022
ENGINEER OF DESIGN AND ENVIRONMENT

ISSUED 1-1-07

CONCRETE CURB TYPE B AND COMBINATION CONCRETE CURB AND GUTTER

(Sheet 2 of 2)

STANDARD 606001-08

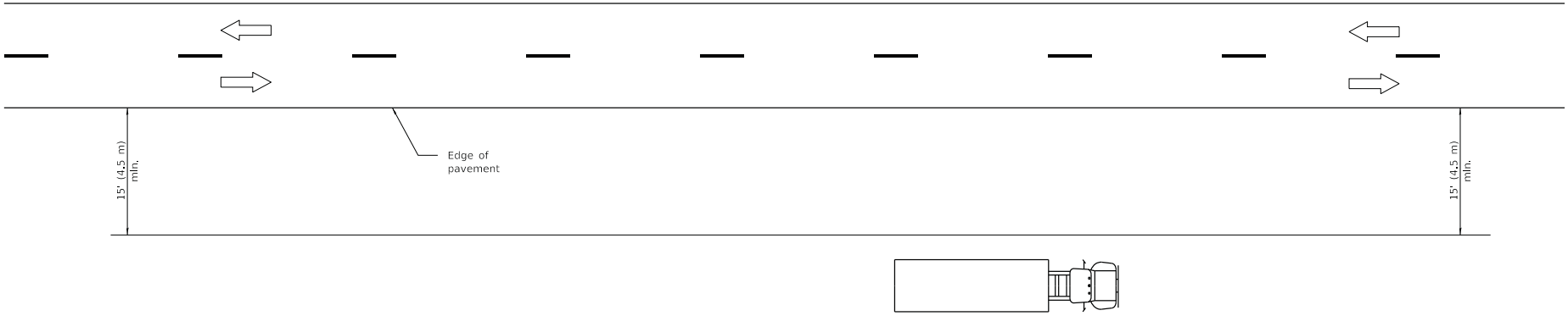

TYPICAL APPLICATIONS

Landscaping work

Utility work

Fencing contracts and maintenance

Cleaning culverts

GENERAL NOTES

This Standard is used where at all times all vehicles, equipment, workers or their activities are more than 15' (4.5 m) from the edge of pavement.

When the work operation requires that two or more work vehicles cross the 15' (4.5 m) clear zone in any one hour, traffic control shall be according to Standard 701006.

All dimensions are in inches (millimeters) unless otherwise shown.

Illinois Department of Transportation

PASSED January 1, 2009
ENGINEER OF OPERATIONS

APPROVED January 1, 2009
ENGINEER OF DESIGN AND ENVIRONMENT

ISSUED 1-1-07

DATE	REVISIONS
1-1-09	Switched units to
	English (metric).
1-1-05	Revised title and notes.

OFF-RD OPERATIONS, 2L, 2W, MORE THAN 15' (4.5 m) AWAY

STANDARD 701001-02

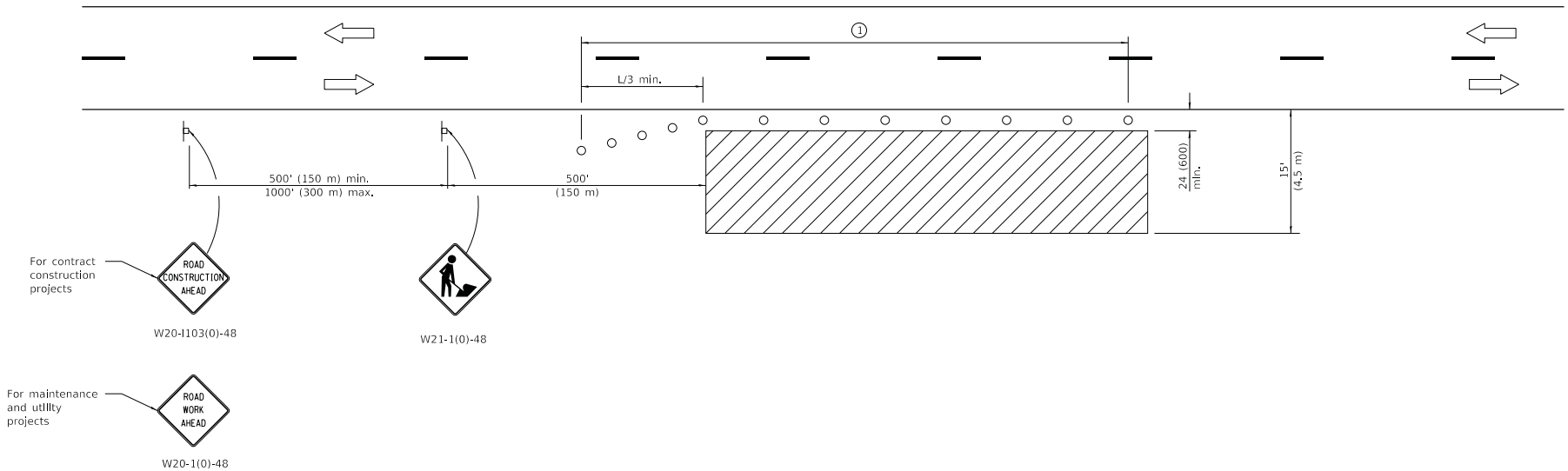

TYPICAL APPLICATIONS

Utility operations
Culvert extensions
Side slope changes
Guardrail installation and maintenance
Delineator installation
Landscaping operations
Shoulder repair
Sign installation and maintenance

SYMBOLS

Work area

Sign

Cone, drum or barricade

(1) When the work operation exceeds one hour, cones, drums or barricades shall be placed at 25' (8 m) centers for L/3 distance, and at 50' (15 m) centers through the remainder of the work area.

GENERAL NOTES

This Standard is used where any vehicles, equipment, workers or their activities will encroach in the area 15' (4.5 m) to 24 (600) from the edge of pavement.

Calculate L as follows:

SPEED LIMIT	FORMULAS English	FORMULAS (Metric)
40 mph (70 km/h) or less:	$L=\frac{WS^2}{60}$	$L=\frac{WS^2}{150}$
45 mph (80 km/h) or greater:	L=(W)(S)	L=0.65(W)(S)

W = Width of offset in feet (meters).

S = Normal posted speed mph (km/h).

All dimensions are in inches (millimeters) unless otherwise shown.

Illinois Department of Transportation

PASSED January 1, 2014
ENGINEER OF SAFETY ENGINEERING

APPROVED January 1, 2014
ENGINEER OF DESIGN AND ENVIRONMENT

ISSUED 1-1-07

DATE	REVISIONS
1-1-14	Revised workers sign
	number to agree with
	current MUTCD.
1-1-13	Omitted text 'WORKERS'
	sign.

OFF-RD OPERATIONS, 2L, 2W, 15' (4.5 m) TO 24" (600 mm) FROM PAVEMENT EDGE

STANDARD 701006-05

For any operation that encroaches in the area between the centerline and a line 24 (600) outside the edge of the pavement for a period of less than 15 minutes.

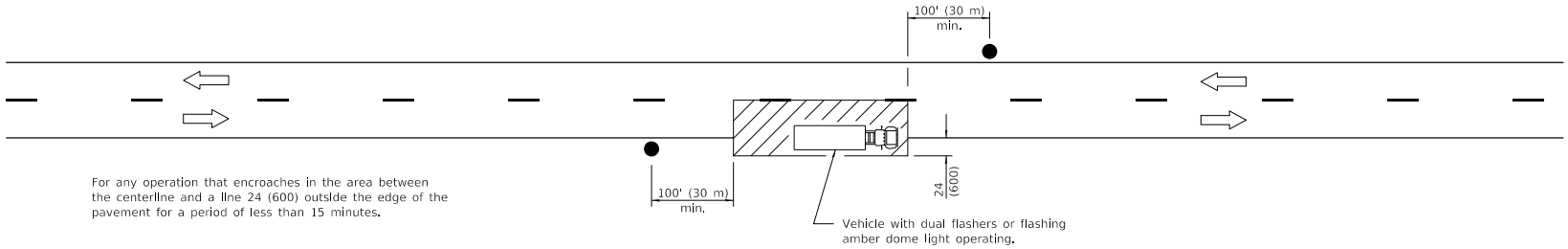

For any operation that is more than 24 (600) outside the edge of the pavement for a period of less than 60 minutes.

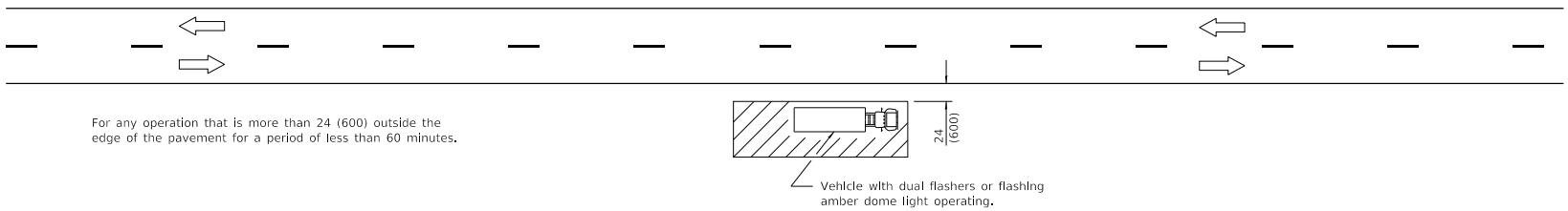

For any operation that encroaches in the area between the centerline and a line 24 (600) outside the edge of the pavement for a period in excess of 15 minutes but less than 60 minutes.

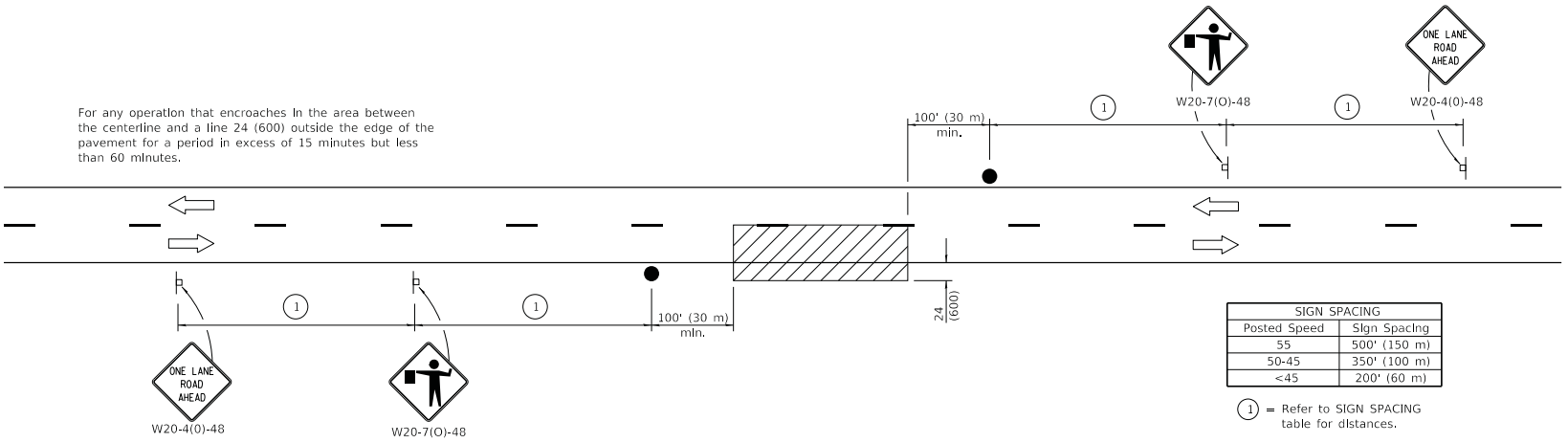

SIGN SPACING	
Posted Speed	Sign Spacing
55	500' (150 m)
50-45	350' (100 m)
<45	200' (60 m)

(1) = Refer to SIGN SPACING table for distances.

All dimensions are in inches (millimeters) unless otherwise shown.

TYPICAL APPLICATIONS

Marking patches
Field survey
String line
Utility operations
Cleaning up debris on pavement

SYMBOLS

Work area

Sign on portable or permanent support

Flagger with traffic control sign

Illinois Department of Transportation

PASSED January 1, 2011
ENGINEER OF SAFETY ENGINEERING

APPROVED January 1, 2011
ENGINEER OF DESIGN AND ENVIRONMENT

ISSUED 1-1-07

DATE	REVISIONS
1-1-11	Revised flagger sign.
1-1-09	Switched units to
	English (metric).

LANE CLOSURE, 2L, 2W, SHORT TIME OPERATIONS

STANDARD 701301-04

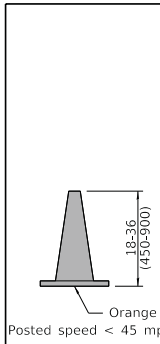

DAYTIME USE

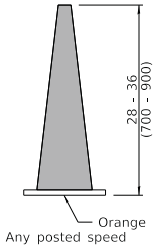

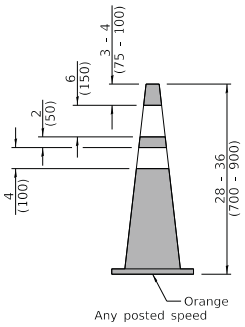

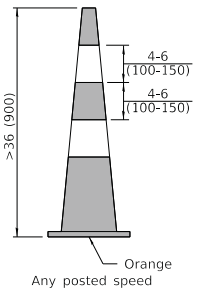

DAY OR NIGHTTIME USE

CONES

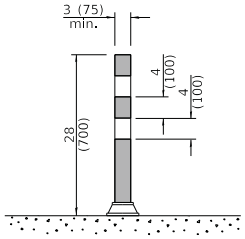

TUBULAR MARKER

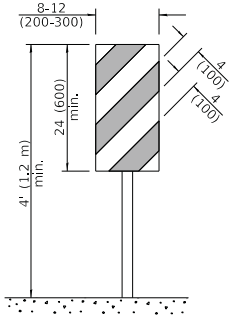

VERTICAL PANEL

POST MOUNTED

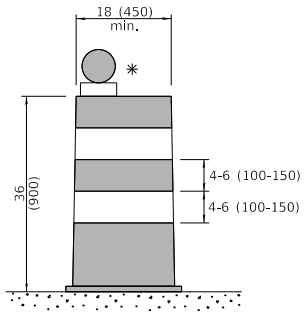

DRUM

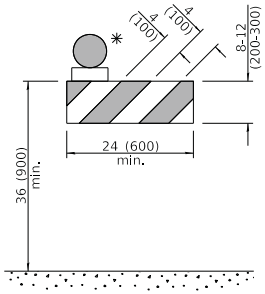

TYPE I BARRICADE

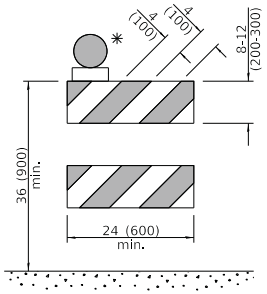

TYPE II BARRICADE

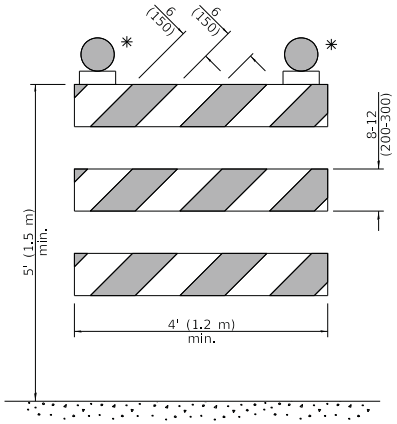

TYPE III BARRICADE

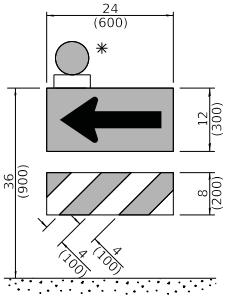

DIRECTION INDICATOR BARRICADE

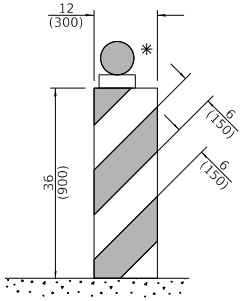

VERTICAL BARRICADE

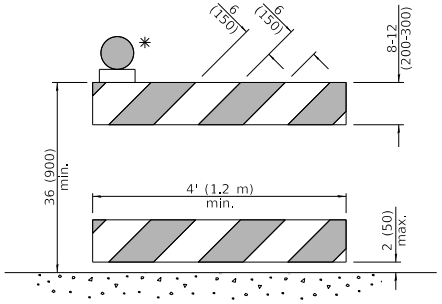

DETECTABLE PEDESTRIAN CHANNELIZING BARRICADE

✳ Warning lights (if required)

GENERAL NOTES

All heights shown shall be measured above the pavement surface.

All dimensions are in inches (millimeters) unless otherwise shown.

DATE	REVISIONS
1-1-19	Revised cone usage and
	added cones >36" (900 m) height.
1-1-18	Revised END WORK ZONE
	SPEED LIMIT sign from
	orange to white background.

TRAFFIC CONTROL DEVICES

(Sheet 1 of 3)

STANDARD 701901-08

Illinois Department of Transportation

APPROVED January 1, 2019
ENGINEER OF SAFETY PROG. AND ENGINEERING

APPROVED January 1, 2019
ENGINEER OF DESIGN AND ENVIRONMENT

ISSUED 1-1-13

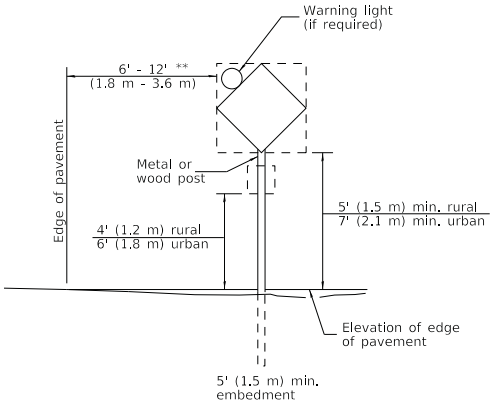

POST MOUNTED SIGNS

** When curb or paved shoulder are present this dimension shall be 24 (600) to the face of curb or 6' (1.8 m) to the outside edge of the paved shoulder.

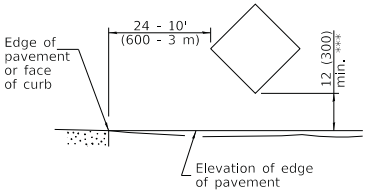

SIGNS ON TEMPORARY SUPPORTS

*** When work operations exceed four days, this dimension shall be 5' (1.5 m) min. If located behind other devices, the height shall be sufficient to be seen completely above the devices.

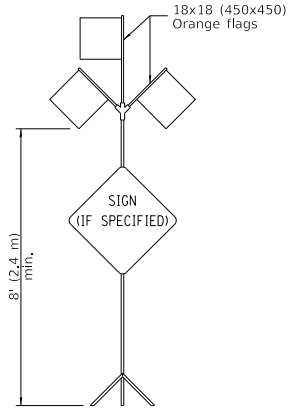

HIGH LEVEL WARNING DEVICE

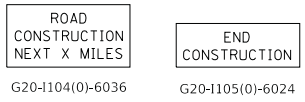

G20-I104(0)-6036 G20-I105(0)-6024

This signing is required for all projects 2 miles (3200 m) or more in length.

ROAD CONSTRUCTION NEXT X MILES sign shall be placed 500' (150 m) in advance of project limits.

END CONSTRUCTION sign shall be erected at the end of the job unless another job is within 2 miles (3200 m).

Dual sign displays shall be utilized on multi-lane highways.

WORK LIMIT SIGNING

W21-III5(0)-3618

R2-1-3648

R10-I108p-3618 ****

R2-I106p-3618

Sign assembly as shown on Standards or as allowed by District Operations.

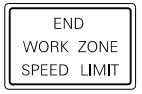

G20-I103-6036

This sign shall be used when the above sign assembly is used.

HIGHWAY CONSTRUCTION SPEED ZONE SIGNS

**** R10-I108p shall only be used along roadways under the juristiction of the State.

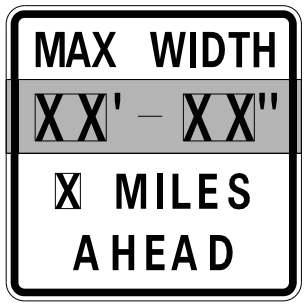

W12-I103-4848

WIDTH RESTRICTION SIGN

XX'-XX" width and X miles are variable.

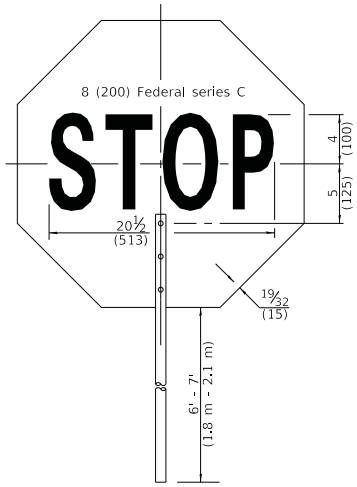

FRONT SIDE

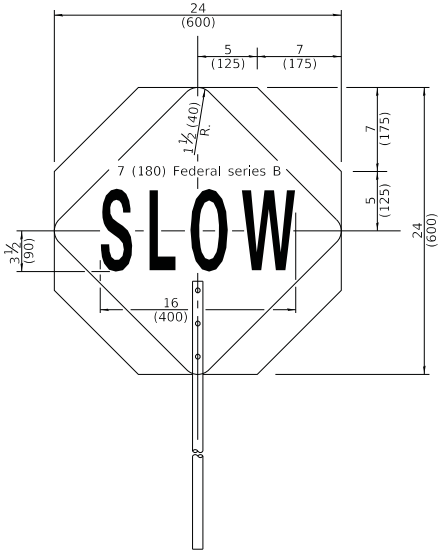

REVERSE SIDE

FLAGGER TRAFFIC CONTROL SIGN

Illinois Department of Transportation

APPROVED January 1, 2019
ENGINEER OF SAFETY PROG. AND ENGINEERING

APPROVED January 1, 2019
ENGINEER OF DESIGN AND ENVIRONMENT

ISSUED 1-1-13

TRAFFIC CONTROL DEVICES

(Sheet 2 of 3)

STANDARD 701901-08

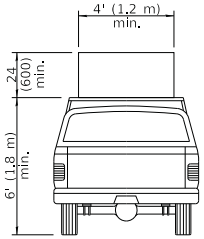

TYPE A ROOF MOUNTED

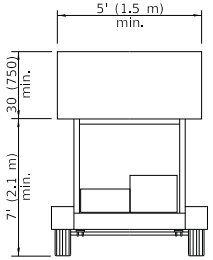

TYPE B ROOF OR TRAILER MOUNTED

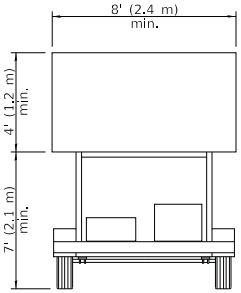

TYPE C TRAILER MOUNTED

ARROW BOARDS

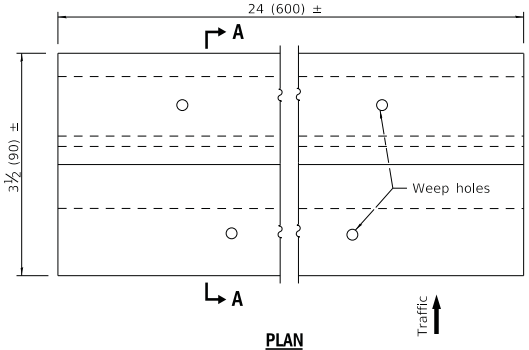

PLAN

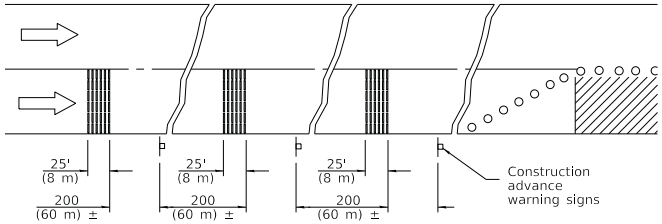

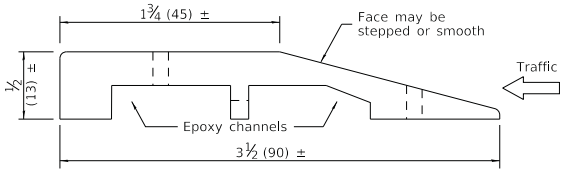

SECTION A-A

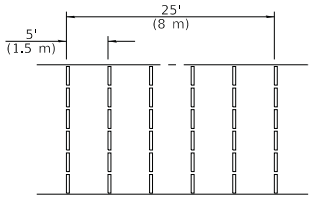

TYPICAL INSTALLATION

TEMPORARY RUMBLE STRIPS

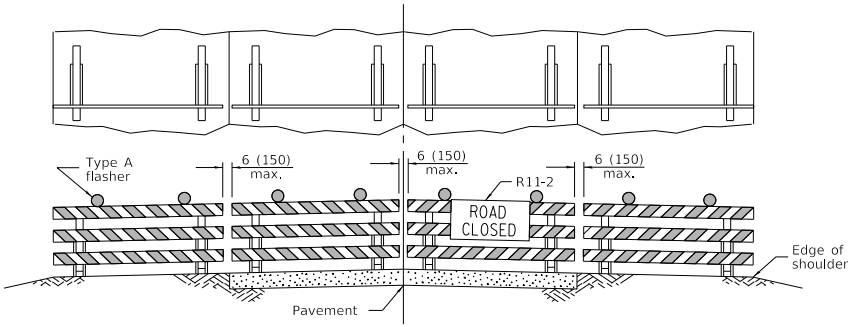

ROAD CLOSED TO ALL TRAFFIC

Reflectorized striping may be omitted on the back side of the barricades. If a Type III barricade with an attached sign panel which meets NCHRP 350 is not available, the sign may be mounted on an NCHRP 350 temporary sign support directly in front of the barricade.

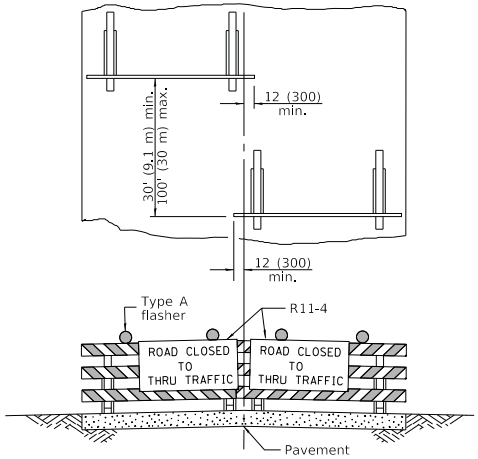

ROAD CLOSED TO THRU TRAFFIC

Reflectorized striping shall appear on both sides of the barricades. If a Type III barricade with an attached sign panel which meets NCHRP 350 is not available, the signs may be mounted on NCHRP 350 temporary sign supports directly in front of the barricade.

TYPICAL APPLICATIONS OF TYPE III BARRICADES CLOSING A ROAD

Illinois Department of Transportation

APPROVED January 1, 2019
ENGINEER OF SAFETY PROG. AND ENGINEERING

APPROVED January 1, 2019
ENGINEER OF DESIGN AND ENVIRONMENT

ISSUED 1-1-13

TRAFFIC CONTROL DEVICES

(Sheet 3 of 3)

STANDARD 701901-08

CONDITION I
APPROACH TRAFFIC STOPPED

CONDITION II
APPROACH TRAFFIC DOES NOT STOP

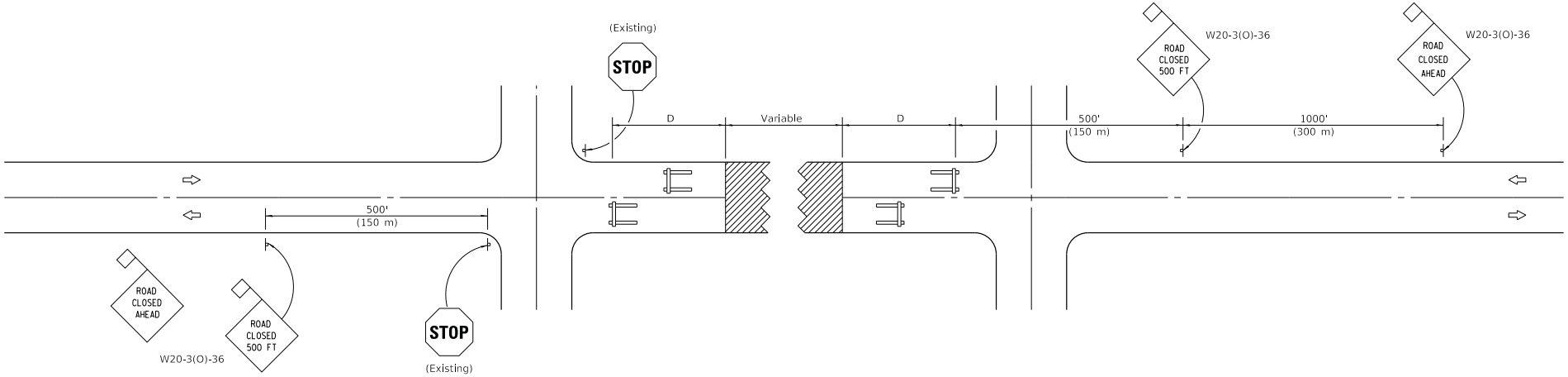

SYMBOLS

Work area

Type III Barricade

Sign with 18x18 (450x450) min. orange flag attached

GENERAL NOTES

Type III Barricades and R11-4-6030 signs shall be positioned as shown in the "Road Closed To All Traffic" detail on Highway Standard 701901. If the distance "D" exceeds 2000' (600 m), an additional set of barricades and R11-4-6030 shall be placed at each end of the work area.

Two Type A Low Intensity Flashing Lights shall be used on each approach in advance of the work area. One light shall be installed above each barricade. If only one barricade is required, the other light shall be installed above the first advance warning sign.

All warning signs shall have minimum dimensions of 36 x 36 (900 x 900) and have a black legend on an orange reflectorized background.

When fluorescent signs are used, orange flags are not required.

Longitudinal dimensions may be adjusted to fit field conditions.

All dimensions are in inches (millimeters) unless otherwise shown.

Illinois Department of Transportation

PASSED January 1, 2012
ENGINEER OF LOCAL ROADS AND STREETS

APPROVED January 1, 2012
ENGINEER OF DESIGN AND ENVIRONMENT

ISSUED 1-1-07

DATE	REVISIONS
1-1-12	Omitted two notes from
	GENERAL NOTES.
1-1-09	Revised General Notes
	and switched units to
	English (metric).

TYPICAL APPLICATION OF TRAFFIC CONTROL DEVICES FOR CONSTRUCTION ON RURAL LOCAL HIGHWAYS
(TWO-LANE TWO WAY RURAL TRAFFIC)
(ROAD CLOSED TO THRU TRAFFIC)

STANDARD B.L.R. 22-7

INLETS, SPECIAL, NO. 4

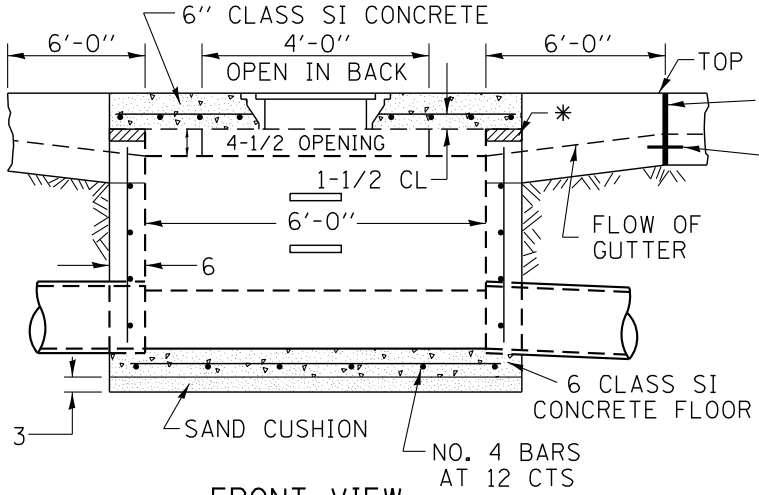

FRONT VIEW

STEPS AT 12 TO 16 CTS.

* THE WALL ADJUSTMENTS SHALL BE MADE WITH CONCRETE BUILDING BRICK OR CLASS SI CONCRETE.

THE HEIGHT OF THE BOX MAY BE CONSTRUCTED 6 SHORT TO ALLOW FOR FIELD ADJUSTMENTS.

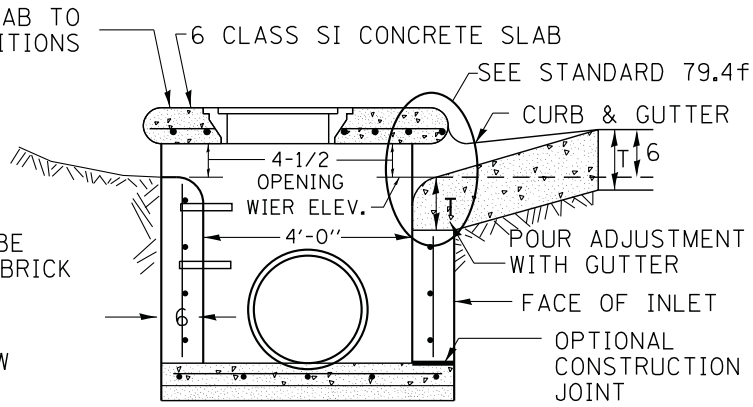

SEC. A-A

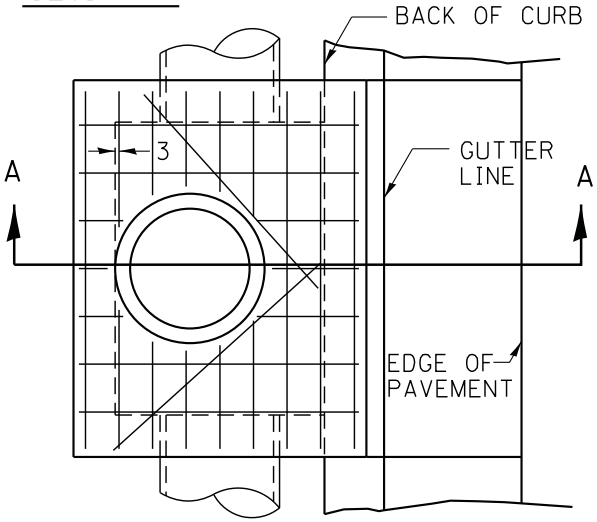

TOP VIEW

ALL DIMENSIONS ARE IN INCHES UNLESS OTHERWISE NOTED.

SEE STANDARD 602701 FOR DETAILS OF STEPS.

1" PREFORMED EXPANSION JOINTS AS SHOWN SHALL BE PROVIDED ON EACH SIDE OF INLET.

CLASS SI CONCRETE OR PRECAST CONCRETE SHALL BE USED TROUGHOUT.

THE SIDE WALLS MAY BE BUILT AS PRECAST SEGMENTAL SECTIONS.

REINFORCEMENT FOR INLETS, SPECIAL, NO. 4 SHALL BE ACCORDING TO DISTRICT STANDARD 79.4g

NOTES

STEPS SHALL BE OMITTED WHEN DEPTH OF INLET IS LESS THAN 5 FOOT

THE INLET SHALL BE CAST IN PLACE OR PRECAST.

EXCEPT AS NOTED HEREON INLETS, SPECIAL, NO. 4 SHALL BE CONSTRUCTED IN ACCORDANCE WITH SECTION 602 OF THE STANDARD SPECIFICATIONS.

THE CONTRACT UNIT PRICE EACH FOR INLET SPECIAL NO. 4 SHALL INCLUDE THE COST OF FURNISHING AND INSTALLING THE FRAME, LID, REINFORCEMENT BARS, FLOOR AND TOP SLABS, CAST IRON STEPS (IF USED).

THE CURB AND GUTTER WILL BE PAID FOR SEPARATELY AND WILL BE MEASURED THROUGH THE INLET.

THE CURB AND GUTTER ADJACENT TO AND 6 FOOT ON EITHER SIDE OF THE INLET SHALL BE CONSTRUCTED AS SHOWN WITH NO ADDITIONAL COMPENSATION FOR THE TRANSITION.

ALL PIPE UNDERDRAIN CONNECTIONS WHEN SPECIFIED SHALL BE DONE IN ACCORDANCE WITH ART. 601 OF THE STANDARD SPECIFICATIONS. THIS WORK WILL BE PAID FOR AT THE CONTRACT UNIT PRICE PER (FOOT) FOR PIPE UNDERDRAINS, TYPE 2 OR PIPE UNDERDRAINS (SPECIAL) OF THE DIAMETER SPECIFIED WHICH PRICE SHALL INCLUDE THE CA7 OR CA16 AND THE CONNECTION TO THE INLET.

LIGHT WEIGHT MANHOLE CASTING

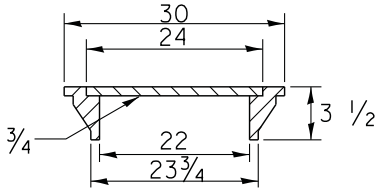

TOTAL WEIGHT 160 LBS.

REVISED - 1-05-16	REGION 2 / DISTRICT 2 STANDARD				F.A. RTE.	SECTION	COUNTY	TOTAL SHEETS	SHEET NO.
REVISED - 8-27-13									
REVISED - 10-04-11							CONTRACT NO.		
REVISED -	SCALE: 1.5455 ' / in.	SHEET NO.	OF	SHEETS	STA.	TO STA.	FED. ROAD DIST. NO.	ILLINOIS	FED. AID PROJECT

PLOT DATE = 7/31/2018